Whole Number 248, ISSN 0429-8284

FUJI ELECTRIC REVIEW

2015
Vol.61 No. 1

Power Electronics

Fuji Electric

Innovating Energy Technology

FUJI ELECTRIC
REVIEW

2015
Vol.61 No. 1

Power Electronics

Today, power electronics is a key technology in all areas where energy is "created," "connected" or "used," from social infrastructure that supports lifelines to home appliances. There are also high expectations of it bringing about a low-carbon society through high-efficiency conversion in energy creation such as mega-solar power plants and energy saving in motor drives, and so on.

Fuji Electric has developed and provided to society products that make full use of power electronics technology for various electromotive power based equipment, transportation and logistics infrastructure, as well as uninterruptible power systems for data centers that support Internet society.

This issue provides an outline of power electronics equipment applying SiC (silicon carbide) power devices to dramatically improve efficiency and reduce size and weight, fundamental technology in power electronics technology development, and international standardization for the global market.

Cover Photo (clockwise from the upper left):
Fuji Electric's top runner motor "Premium Efficiency Motor," 690-V Inverter "FRENIC-VG Stack Series," SiC hybrid module, All-SiC module, Mega solar PCS "PVI1000AJ-3/1000"

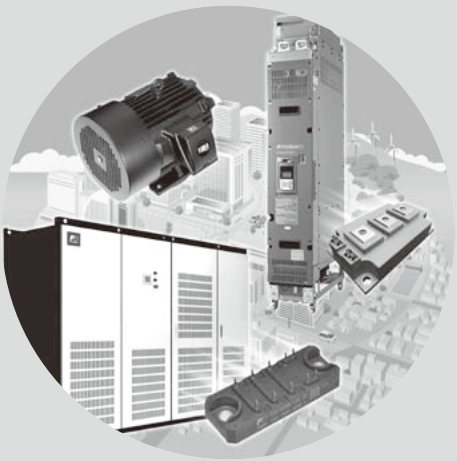

FUJI ELECTRIC REVIEW vol.61 no.1 2015
date of issue: March 30, 2015

editor-in-chief and publisher **EGUCHI Naoya**
Corporate R & D Headquarters
Fuji Electric Co., Ltd.
Gate City Ohsaki, East Tower,
11-2, Osaki 1-chome, Shinagawa-ku,
Tokyo 141-0032, Japan
http://www.fujielectric.co.jp

editorial office Fuji Electric Journal Editorial Office
c/o Fuji Office & Life Service Co., Ltd.
1, Fujimachi, Hino-shi, Tokyo 191-8502,
Japan

Fuji Electric Co., Ltd. reserves all rights concerning the republication and publication after translation into other languages of articles appearing herein.
All brand names and product names in this journal might be trademarks or registered trademarks of their respective companies.

Contents

Power Electronics

Preface to the Special Issue on "Power Electronics" 2
Johann W. Kolar

Power Electronics: Current Status and Future Outlook 4
TOMOTAKA, Masatsugu

Mega Solar PCS Incorporating All-SiC Module "PVI1000 AJ-3/1000" 11
OSHIMA, Masafumi MAEDA, Tetsuya MURATSU, Hiroki

Large-Capacity, High-Efficiency 3-Level UPS for North America "7000HX-T3U" 17
KAWASAKI, Daisuke HAMADA, Ippei SATO, Atsushi

General-Purpose Inverters Meeting Global Standards "FRENIC-HVAC/AQUA Series" and "FRENIC-Ace Series" 22
KONO, Hiroyuki MIGAKI, Takumi KAIMI, Takashi

690-V Inverters Equipped with SiC Hybrid Module "FRENIC-VG Stack Series" 27
SATO, Kazuhisa TAKANO, Makoto NOMURA, Kazuki

Fuji Electric's Top Runner Motor— Loss-Reduction Technology of "Premium Efficiency Motor" 31
TACHI, Norihiro KOIBUCHI, Hirobumi TAKAHASHI, Kazutoshi

Inverter-Integrated Motor 36
UTSUNO, Makoto MATSUI, Kohei

Technologies to Reduce Size and Weight of Power Electronics Equipment for Rolling Stock 41
TAKIZAWA, Masamitsu NISHIJIMA, Tomotaka

Latest Trend and Safety and Reliability Technology of Rolling Stock Doors 45
UMEZAWA, Kotaro TERASAKI, Tomio NATAMA, Shigeki

Railway Static Power Conditioner for Shin-Kurobe Substation of Hokuriku Shinkansen 52
OSO, Hiroshi KANEKO, Tomomi SUZUKI, Akio

Multifunctional On-Shore Power Systems for Harbors and Shipyards 58
MIYASHITA, Tsutomu UMEZAWA, Kazuyoshi JOICHI, Hiroshi

Simulation Technology for Power Electronics Equipment 63
MATSUMOTO, Hiroyuki TAMATE, Michio YOSHIKAWA, Ko

Supplemental Explanation

Functional Safety, Power Device Drive Conditions 68

Power Device Generated Loss, IP 69

SIL 70

3-Level Power Conversion 71

New Products

High-Performance Compact Inverter "FRENIC-Ace" 72

Preface to the Special Issue on "Power Electronics"

Johann W. Kolar*

Raising the efficiency of energy use and increasing the integration of renewable energy in energy production are today mandatory goals of the energy policy of leading industrial nations. In the case of electrical energy, power electronics, i.e. the electronic control of power flows and the conditioning of electrical voltages and currents by means of high switching frequency power semiconductors represents a key technology in this context. Examples are the feeding of photovoltaically generated DC energy into AC grids with simultaneous assurance of solar cell operation at the maximum power point, and the minimization of transmission losses on the connection of windparks to geographically distant load centres by means of high-voltage DC transmission. On the other hand one should mention here the possibility of avoiding inefficient industrial processes by means of a controllable voltage that is flexible with regard to amplitude and frequency which, e.g., enables high efficiency, variable speed drives to be realized with controlled torque.

Because of the abovementioned advantages, power electronics converters exhibit a considerable variety of application possibilities and over the past few decades have been significantly improved by the continuous development of power semiconductor technology, the employment of digital signal processing, new converter topologies and modulation and control schemes in respect of functionality, cost/performance ratio, physical size and efficiency. In spite of the high state of the technology thus attained, there still exists a demand for a massive further increase in performance, whereby typically not only one performance index but simultaneously several objectives need to be improved, e.g. efficiency and size or costs and efficiency.

New component technologies such as wide bandgap, i.e. SiC and GaN power semiconductors offer a technological basis for the above but because of the high switching speed, this must be complemented by new packaging technologies. Integration of the gate driver and the power switch is obvious here and in future will also enable programming of the switching behaviour as well as local monitoring. Further enablers are new joining technologies in power semiconductor modules, such as the replacement of soldering by low temperature silver sinter processes, whereby higher operating temperatures and/or lower cooling effort become possible. With regard to passive components one should mention new ceramic capacitor technologies with high energy density and current rating, and new heat management processes such as double-sided cooling and local two-phase cooling. Finally, the technology and design space will be extended by an even broader implementation of digital technology: on the one hand in converter control, and on the other hand for identification procedures as basis for optimal on-line controller parametrization. Furthermore, in the field of power supplies a transition from hard-switching converters operated in continuous current mode is to be expected to converters with discontinuous or triangular-shaped current curves and soft switching; the higher conduction losses compared with continuous current flow are here compensated by the low on-state resistances of new power semiconductors. In order to limit the EMC filtering effort, it is then sensible to employ phase-shifted operation of several systems working in parallel, i.e. interleaving, by means of which a continuous current curve again results. The overall more complicated modulation in this case can be managed through the continuous further development of digital technology (Moore's Law) by means of signal processors or FPGAs.

Furthermore, as always with the further development of established technologies, increased integration of partial functions will take place on all levels. For example, on the converter level integration of motor and inverter is advantageous as it allows an optimal design of an overall system and an easier application for the user. Finally, the further development of simulation tools should be mentioned, which will facilitate a multi-domain analysis of power electronics converters, e.g. the simultaneous examination of electrical and thermal or magnetic and thermal issues. The challenges here lie mainly in model generation and parametrization.

The present Special Issue of Fuji Electric Review offers for the abovementioned points many direct examples in the form of finished products, e.g. an all-SiC PV inverter of high power, optimized with respect to efficiency and costs, a hybrid Si-SiC inverter traction converter of high efficiency and power density, a vari-

* Professor, Swiss Federal Institute of Technology Zurich
Eidgenössische Technische Hochschule Zürich

able speed drive for air conditioners with inverter integrated in the motor to reduce size and costs, a new motor series optimized for efficiency, and uninterruptible power supplies with new T-type three-level topology. The significant improvement in performance obtained with these industrial systems over the state-of-the-art impressively confirms the highly dynamic technological progress in power electronics and a comprehensive practical mastery of an extremely broad technology spectrum.

Despite of the very high technological level now attained, the improvement of the performance of power electronics will continue in future. The next development step will presumably focus on cost reduction and the assurance of high reliability and robustness. New production technologies such as the encapsulation of power semiconductors, optical signal paths and heat removal devices in printed circuit boards and 3D additive manufacturing technologies will enable new geometries or increased multifunctional uses of construction elements. The highly integrated and highly compact systems, however, will then require convergence of simulation and measurement procedures in order to simulate no longer measurable quantities on the basis of adapted models directly accompanying measurement.

With regard to the fields of application of power electronics, we can expect an expansion of the present areas to direct coupling to medium voltage with isolated medium frequency converters, e.g. for the supply of DC distribution systems. At the same time, in the low power area, with utilizing microelectronics manufacturing technologies, a new branch of power electronics will be established that may be termed micro-power electronics. Finally, with the increasing spread of power electronics, one will need to consider during the design process not only minimal manufacturing costs but also the support of recyclability in order to enable a resource-conserving circular economy to be established. Considerations regarding materials use and costs should then also be addressed in academic research, as has been the case for several years at the Power Electronic Systems Laboratory at ETH Zurich.

In conclusion it should be highlighted that in central fields of application, a paradigm change is to be expected from the consideration of a single converter to the design of entire power supply chains. The demand for efficient power conversion at any given instant will be replaced by the demand for the assurance of an efficient and reliable energy supply with minimal overall costs over the lifetime of a power supply system. At the same time, apart from the analysis of the detailed functioning of converters, the investigation of interactions of converters, e.g. in micro and pico-grids will also gain significantly in importance. The power electronics converter will then become a standardized functional block, similar to integrated circuits in analogue and digital technology, which several decades ago arose from discrete circuits. The realization of smart grids and ultimately smart multi-energy carrier grids, which apart from electrical energy also integrate other energy carriers, will hence be supported to a significant extent. The necessary expansion of technological competence from the components to the system and in addition to other disciplines apart from power electronics, however, presents a massive challenge, but on the other hand offers fascinating possibilities for creativity, technological innovation and ultimately economic success!

Power Electronics: Current Status and Future Outlook

TOMOTAKA, Masatsugu *

1. Introduction

Power electronics and products based on power electronics technology have an indispensable role that penetrates every corner of our current society ranging from compact portable devices to social infrastructure represented by industrial plants and mega solar. Fuji Electric has combined its core technology of power devices and power electronics with its control technology and applications in order to concentrate its efforts on the development of products that efficiently and safely supply and use energy. Fuji Electric's power electronics products and their field of application are shown in Fig. 1. This paper describes the latest trends in power electronics technology, as well as Fuji Electric's activities and application products.

2. Market Needs and Technology Trends

2.1 Compactness and lightweight features

All types of products including those in the power electronics field are increasingly required to be smaller in size and lighter in weight. In particular, compactness is required when equipment for moving objects such as rolling stock needs to be installed in a limited space, and a lighter weight is needed to ensure acceleration and deceleration performance and to optimize the maximum loading capacity of vehicle bodies, since the weight of equipment adds to the overall mass of the vehicle body.

2.2 Energy conservation and high efficiency

The discharge of greenhouse gases needs to be suppressed in order to prevent global warming, and as such, great emphasis is being placed on the use of renewable energies and energy conservation.

Power electronics equipment has become indispensable in applications such as DC-AC conversion for connecting DC power generated by mega solar to transmission systems, as well as DC-AC interconversion in the storage facilities of smart grids used in providing a stable supply of highly variable renewable energies. The conversion efficiency of

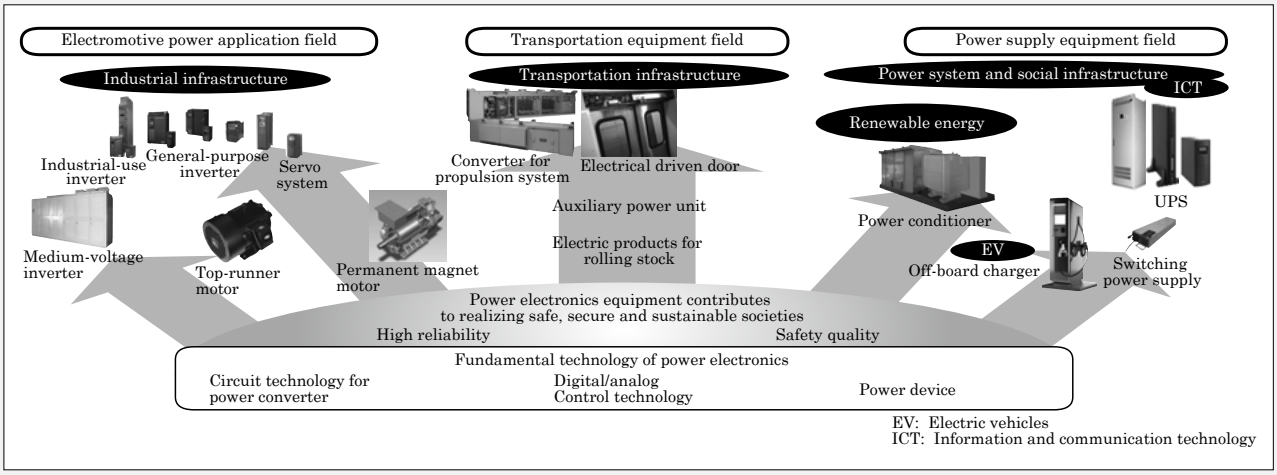

Fig.1 Fuji Electric power electronics products and their field of application

* Executive Officer
Corporate General Manger, Power Electronics Business Group, Fuji Electric Co., Ltd.

the power electronics equipment in these types of facilities is directly related to the energy savings of systems, and from a business standpoint, this is the most important requirement for these products.

At the same time, utilization is expanding every year for data centers that support Internet based societies such as cloud services that provide social networks, and as a result, there is a growing need for large-capacity uninterruptible power systems (UPS) compatible with large-scale data centers. As increase in energy consumption for data centers attracts attention, attention has been given to the efficiency of UPS, especially in North America, and as a particular indicator, emphasis is placed on the selection of a UPS that has high efficiency under actual load. Furthermore, the time for renewal of IT equipment, for which there was heavy investment in the Japanese market around the year 2000, is approaching, and customers are requiring replacement with highly efficient new products that maintain compatibility with existing products.

In addition, in the field of variable speed driving devices, which have always placed importance on functionality and performance, there is a growing global trend toward the need for energy savings, and as a result, high-efficiency motors that utilize the Top Runner Approach[*1] are continuing to penetrate the Japanese market. Overseas markets have seen the enactment of European standards that regulate the efficiency of inverter systems that drive motors of 1,000 kW or less. These regulations are scheduled to take effect as an International Electrotechnical Commission (IEC) standard in 2018.

2.3 Diversification of needs

As products that utilize power electronics technology continue to gain popularity, market needs are diversifying for power electronics products. Take general-purpose inverters as an example. Up until now, the product line-up for these has mainly been based on functionality and performance, but recently, products have been required to meet specific application and installation environment of each customer. For example, inverters for driving mid-to-low level elevators of machine-roomless type, which have become mainstream, are now required to be smaller and thinner in dimension. In addition, products are required to be equipped with a diverse range of functions according to users and their applications.

2.4 Power devices

For over 50 years, power devices manufactured from silicon (Si) semiconductor materials have been used for power electronics equipment. Currently, mainstream insulated gate bipolar transistor (IGBT)[*2] have been advancing in their device structure, processing technology and wafer technology, and as a result, power loss is now less than half of what it was initially as these devices continue reducing loss as shown in Fig. 2. At the same time, however, we have just about reached the limits of Si semiconductor performance, and since greater performance improvements cannot be expected in the future, there has been increased anticipation for the debut of power devices that are capable of achieving dramatic characteristic improvements.

In light of this, anticipation is mounting for wide band gap semiconductors as semiconductor materials capable of achieving dramatic low-loss performance, high-frequency operation and high-temperature operation. In recent years, silicon

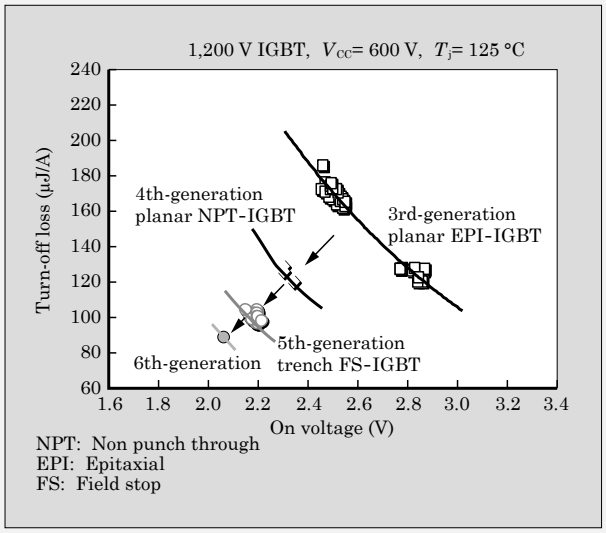

Fig.2 Si-IGBT generation and feature changes

***1: Top Runner Approach**

This is a Japanese unique system based on the "Act on the Rational Use of Energy," in which a target criteria of energy-saving performance for products is defined higher than that of the best energy-saving equipment (Top Runner) as of the definition. This program was introduced based on the revised Act on the Rational Use of Energy in 1999. As of FY2014, there are 28 products subject to the system, which include air conditioners, TVs, electric refrigerators, and fluorescent and LED lighting equipment. In addition, 3-phase induction motors (industrial-use motors) became part of the Top Runner Program in October 2013.

***2: IGBT**

This is an acronym for an insulated gate bipolar transistor. This is a voltage control device that has a gate insulated with an oxide insulated film, having the same structure as MOSFET. Self-turn-off power devices such as GTO and power transistors were current driven. The IGBT, however, is voltage-driven, and as such, they have gained instant popularity because of its simple drive circuit, easy control, and high-speed switching capabilities. It is currently used by almost all power electronics equipment, with the exception of low-voltage, small-capacity equipment such as switching power supplies.

carbide (SiC)[*3], as one type of wide band gap semiconductor, has finally become a practical technology, and there is increasing expectation that SiC power devices and their application equipment will gain popularity.

2.5 International standardization

As borderless markets continue to progress, international standardization has been increasing in its importance. The need for power electronics products to be compliant with international standards has steadily increased, and they have covered many fields, such as insulation, electromagnetic compatibility (EMC) as well as data transmission, functional safety [Supplemental explanation 1] and efficiency characteristics. Furthermore, the development of standards has been progressing, starting with EMC emission limit values, and now targeting the expansion of frequency ranges, as well as the latest technologies which include grid connected power converter (GCPC) and wireless power transfer (WPT)[*4].

On the other hand, there is a movement toward setting international standards as regional standards based on the World Trade Organization/Technical Barriers to Trade (WTO/TBT) agreements. A good example of this is seen in China's product safety certification system, the China Compulsory Certification (CCC). Therefore, compliance with international standards and regional standards is considered to be an essential condition in expanding products for the global market. Furthermore, third-party certification for standards also plays a role in establishing evaluation criteria for product quality and performance. As a result, the activities and timing surrounding the acquisition of self-declaration or third-party certification for standard compliance have carried a huge weight in the development of products in recent years.

On the other hand, it is gathering momentum to actively pursue international standard compliance, which has been somewhat of a passive activity in the past, as part of one's global strategy and intellectual property strategy.

3. Fuji Electric's Efforts in Technology Development

3.1. Development and application of new power devices

Fuji Electric has set its focus on SiC based power devices and has been carrying out research development while participating in the Tsukuba Power Electronics Constellations (TPEC), a project being led by the National Institute of Advanced Industrial Science and Technology. Currently, we have reached the stage where 1,000 V class SiC power devices are developed to a practical level, and in April 2014, we started operations of a continuous production line at the Matsumoto Factory that utilizes our 6-inch wafers in pre-process and post-process work.

Fuji Electric is now supplying the market with a line-up of compact and lightweight products that feature low-loss and high-frequency operation, both of which are advantages of SiC power device. In addition, we are continuing to develop technologies and products that fully leverage the potential of SiC, which includes high-temperature operation and a high blocking voltage.

Fuji Electric is one of only a few companies worldwide that deals in both power devices, which form the backbone of power electronics equipment, and their application products. Fuji Electric has taken advantage of this by forming an alliance between our device and application divisions to further facilitate the development of new technologies and new products. Besides the above mentioned SiC power devices, our device and application divisions are working hand-in-hand in development at all stages starting at the product planning stage for products that also include our Si power devices.

3.2 Platform

In order to supply an increasingly diversified line-up of products that meet the various needs of globalization and the market, there has been an increasing need to develop power electronics technologies and products, and this requires that emphasis

---

***3: SiC**

This is a compound of silicon (Si) and carbon (C).

SiC exists in many structural polymorphisms of crystal, such as 3C, 4H and 6H. Due to its structure, it is known as a wide-gap semiconductor, having a band-gap between 2.2 to 3.3 eV. Since SiC possesses physical characteristics that are advantageous as a power device, such as a high dielectric breakdown voltage and high thermal conductivity, it has been advancing in its practical applications by enabling devices to have high blocking voltage, low loss and high-temperature operation characteristics.

***4: WPT**

This is an acronym for wireless power transfer. This is a technology to transfer electrical energy in a contactless manner. It converts electric power into medium-frequency AC with a device such as an inverter, and then convert this into medium-frequency electromagnet waves by use of the primary coil. This, in turn, is propagated to the secondary coil by using the physical phenomena described below and received energy is converted to AC power. The utilized physical phenomena include electromagnetic induction, magnetic resonance, electric field coupling, electric field resonance and radio frequency radiation according to electromagnetic-wave frequency. These have traditionally been used in home appliances and mobile devices, but they are now expected to be used in the charging systems of electric vehicles.

be placed on securing development personnel and speeding up the development process. Fuji Electric has developed, as a platform, a commonality between product groups, which includes main circuits, which are composed of power devices, as well as their control circuits, and based on this, we have been able to expand the product family and capacity series of new product groups. We have been working to expand this platform, as well as product development based on this platform, in all areas of power electronics such as general-purpose inverters, which are composed of various product groups, UPS and equipment installed in rolling stock.

3.3 Improvement of development environment

In order to improve speed and integrity in the development of power electronics technology, Fuji Electric has been actively making use of simulation technology.

Traditionally, control system simulations and simulations dealing with individual physical phenomenon, such as can be found in thermal cooling and the unwanted emission of electromagnetic noise, have been the mainstream. In power electronics equipment, there is a mutual and close relationship between several aspects of power devices including the wiring structure design for achieving a specified operation, drive conditions [Supplemental explanation 2] and generated loss [Supplemental explanation 3] (input to the cooling system), as well as phenomena related to the unwanted emission of electromagnetic noise. Therefore, the results of combination tests make it impossible to avoid development backtracking, such as performing a redesign due to tradeoffs in operating conditions.

In order to overcome this situation, Fuji Electric has developed a simulation technology for power electronics equipment based heavily on device simulations. By using this technology, it is possible to assess efficiency and size of the power electronics unit in the very early stages of development, and this makes it possible to reduce the development period by cutting down on the man-hours needed in creating and evaluating prototypes. (Refer to "Simulation Technology for Power Electronics Equipment" on page 63.)

3.4 Globalization and international standards

Power electronics equipment developed for the global market must be compliant with international standards. It is becoming more common to establish compliance with the UL standard in the United States and EMC requirements for the CE marking in Europe. In addition to these, the functional safety standard (IEC 61508) has become a very important standard in recent years, and it is going to be a critical requirement in meeting the efficiency regulations of motors and inverters. In particular, compliance with functional safety regulations is not limited to the assessment of technology and quality of individual products, but also relates to the development processes of such products.

In order to conform to international standardization of products, Fuji Electric promotes improvements in its own technology development and in-house systems so as to comply to the regulations of standards before they come into effect, and by doing this, we are working to provide compliant products and services even before enforcement of regulations begin. Furthermore, we have established targets and are promoting activities to strengthen the contributions of human resources in international standardization activities such as deliberation on standards creation in IEC.

4. Product Development

4.1 SiC applicable products

In concert with putting SiC power device to practical use, we started out by equipping 200-V series and 400-V series general-purpose inverters with a hybrid module consisting of Si-IGBT and SiC-Schottky barrier diode (SiC-SBD)[*5]. After this, we have introduced a power conditioning sub-system (PCS)[*6] for mega solar mounted with a 1,200-V withstand-voltage All-SiC module, as well as a 690-V series inverter equipped with a 1,700-V rated voltage SiC hybrid module (see Fig. 3). Following this, we worked to expand the voltage class and current capacity of our SiC power devices, while also promoting development for expanding SiC based application technologies and applicable products.

***5: SBD**

This is an acronym for Schottky barrier diode. This diode has rectification characteristics utilizing a Schottky barrier that is created by bonding metal with a semiconductor. Because of its excellent electrical properties, application of SiC-SBDs for free wheeling diodes is becoming popular. Compared to PIN diodes that use minority carriers, SBD, which has fast reverse recovery and low reverse recovery loss, must operate via the usage of majority carriers.

***6: PCS**

This is an acronym for power conditioning sub-system. This piece of equipment converts power from DC voltage generated by a photovoltaic cell or fuel cell into AC power. In general, it is configured with an inverter for converting DC into AC. It works in order to implement control that maximizes power output according to the output characteristics that photovoltaic cells have toward solar radiation or the operating characteristics of fuel cells. This system also comes equipped with a power failure detection function that prevents electric shock accidents caused by continuous stand-alone use during blackouts, as well as a function that supports continuous operation during short-term voltage drops (instantaneous drop).

(a) PCS for mega solar equipped with All-SiC module

(b) 690-V series inverter equipped with SiC hybrid module

Fig.3 SiC module and SiC module equipped products

4.2 Electromotive power based equipment field

There is a diverse range of product groups for the electromotive power based equipment field, and we have from the very early stages created a development policy based on a platform for developing new products in accordance with market characteristics. This has allowed us to speed up the development of products, and thereby, release them earlier to the market. The "FRENIC-HVAC/AQUA Series" has been released as a solution to air conditioning and pump applications that require usage without a storage panel, which is quite common in the North American and Asian markets. The series is characterized by being compatible with IP55 [Supplemental explanation 4], which has enhanced the dust-proof and waterproof structure. We have developed a stack-type inverter as a product model suited for markets that are expected to grow in the future, such as those for cranes, molding machines and automatic testing machines. (Refer to "690-V Inverters Equipped with SiC Hybrid Module 'FRENIC-VG Stack Series'" on page 27.) In addition, we have developed products equipped with SiC power devices and expanded our series of medium-voltage inverters so that we can continue to offer optimized solutions based on the various application and usage environments of our customers.

Multi-language display functionality for the operation panel of products has become an indispensable feature of products developed for the global market. As such, our products make it easy to display several different languages by simply downloading language data, created by a personal computer based language creation tool, to the operation panel.

Furthermore, we have also released the "FRENIC-Ace Series" equipped with customized logic functions that support our customers' various application needs in plant facilities and processing machines. Customers are able to make their own inverter control programs based on their application needs by themselves. As a component that facilitates programming, the unit comes equipped with a wealth of logic timers, an analog computing unit and digital/analog mixed components. (Refer to "General-Purpose Inverters Meeting Global Standards 'FRENIC-HVAC/AQUA Series' and 'FRENIC-Ace Series'" on page 22.) In future models, we are also planning on improving convenience by diversifying the types of components and expanding the maximum number of steps.

We are working to promote compliance with the functional safety standard (IEC 61508), which aims at ensuring safety in equipment and systems, and in this respect, we have developed an inverter compatible with safety integrity level (SIL) 3 [Supplemental explanation 5], which is the standard for representing the safety performance of a system. We improved the probability in diagnosis and enhanced the development process at the time of moving up to SIL3 from SIL2. In the future, we plan to further expand our safety-function compatible models, as well as introduce safety bus compatibility.

4.3 Rotating machine field

In overseas markets, emphasis is placed on the efficiency class of single motors that is regulated by IEC standard. In North America, most motors are of the IE2 (high efficiency) and IE3 (premium efficiency) class, and even in Europe, the IE2 class has been gaining popularity. In Japan, emphasis has been placed on the efficiency of the system in combination with an inverter. As a result, most motors are of the IE1 (standard efficiency) class, while the IE2 and IE3 classes have lacked popularity. Fuji Electric has developed an IE3 compatible "Premium Efficiency Motor" based on the Top Runner Program. (Refer to "Fuji Electric's Top Runner Motor—Loss-Reduction Technology of 'Premium Efficiency Motor'" on page 31.)

Inverter control for conserving energy in air-conditioning systems has been increasing in demand, and as a result, securing inverter installation space has become an issue. Fuji Electric has been working to develop an inverter equipped motor based on the synergy of our specialized power semiconductor technology and power electronics technology. (Refer to "Inverter-Integrated Motor" on page 36.)

4.4 Transportation equipment field

In the field of equipment to be mounted on rolling stock, the demand for small and lightweight equipment that can be mounted on moving objects has become one of the most important issues.

The traction converter[*7] of the propulsion system for Shinkansen (bullet) trains is always an application for which the most advanced tech-

nology available is needed. The newest series of Shinkansen trains operated by Central Japan Railway Company is the N700A model, and it has achieved higher efficiency and a lighter weight by utilizing a low-loss snubber-less system, while also achieving a smaller and more lightweight design for the traction converter with a traveling wind self-cooling (blower-less) system. Compared to the Series 300 Shinkansen train, cubic volume has been reduced 42% and weight by 59%.

Increased compactness and lightweight features are also being required for the auxiliary power unit[*7], which converts high-voltage power received from feeding system such as overhead lines or third rail in order to supply low-voltage power to on-car equipment such as the air conditioning and lighting systems. Up until now, it has been common to adopt a system to supply power that uses a transformer to insulate the power of the commercial frequency output from the converter in the auxiliary power unit. Fuji Electric has made full use of its power electronics technology to develop an auxiliary power unit based on a medium frequency link technology with a medium frequency transformer to insulate medium frequency AC power of the kHz order, and then convert this to the commercial frequency and DC power so that it can be supplied. This unit has achieved significant compactness and weight reduction improvements (see Fig. 4).

Fig.4 Auxiliary power unit with medium-frequency link

The field of rolling stock is one of the most highly anticipated fields with regards to the practical use and popularization of SiC power devices. Fuji Electric is carrying out development work to meet the expectations of miniaturization and weight reduction improvements of cooling structures through the reduction of generated loss, as well as the size and weight reduction improvements of filter reactors and insulation transformers through increase of switching frequency. (Refer to "Technologies to Reduce Size and Weight of Power Electronics Equipment for Rolling Stock" on page 41.)

In the field of electrical driven doors for rolling stock, we have, in addition to our service-proven linear motor driven door, developed and released a door equipped with a rotary type flat motor, Flat Cup Permanent Magnet Motor (FCPM) superior in energy-saving and lightweight features. This door is now available in the Japanese, Southeast Asian and North American markets. The opening and closing operation of doors and maintaining the door at the closed position are directly connected to passenger safety, which is considered to be of the highest importance for the electrical driven doors of rolling stock. Fuji Electric has been offering highly reputable and industry recognized doors to overseas markets, especially the North American market, and we are working on achieving an even higher level of safety, while conforming to international and regional standards. (Refer to "Latest Trend and Safety and Reliability Technology of Rolling Stock Doors" on page 45.)

4.5 Power supply equipment field

In the field of power supply equipment such as UPS, reliability and functionality have always been emphasized, but in recent years high efficiency and energy savings have become the most important need. Fuji Electric has utilized its control technology and newest technology, which combines the latest device technology and circuit technol-

***7: Traction Converters and Auxiliary Power Units**

In the field of electrical rolling stock, equipment is sometimes labeled according to its application, with equipment related to the propulsion system of the rolling stock being indicated by the Japanese character for "main" and equipment used for other purposes being indicated by the characters for "auxiliary". In trains that utilize an inverter drive system, such as the Shinkansen train, the traction motor used for propelling the train is called the main motor, and the converter and inverter used to drive the traction motor is called the main converter. Furthermore, the converter, which converts the high-voltage power received from overhead lines or third rail into a commercial frequency low-voltage power used in the air conditioning and lighting equipment of the train, is an independent piece of equipment, but in order to distinguish it from the traction converter for propulsion system, it is referred to as the auxiliary power unit.

***8: RB-IGBT**

This is an acronym for reverse-blocking insulating gate bipolar transistor. It is also called a reverse blocking IGBT. It is an IGBT that has blocking voltage in the reverse direction (between the emitter and collector). Regular IGBT devices do not have blocking voltage in the reverse application direction, and they need to insert a diode. In contrast, the RB-IGBT has the blocking voltage of the same level as the forward direction, and it does not require a diode.

***9: New 3-Level Inverter**

Three-level power conversion represents one of the new types of multi-level conversion circuits that greatly reduce the power loss of the power converter. Advanced T-type neutral-point-clamped (AT-NPC) new 3-level inverter uses this 3-level power conversion method. For more details, refer to "3-Level Power Conversion" on page 71 [Supplemental explanation 6].

ogy in devices such as the reverse-blocking IGBT (RB-IGBT)[*8] based advanced T-type neutral-point-clamped (AT-NPC) new 3-level inverter[*9], to supply the market with highly efficient and space-saving products.

Large-capacity UPS for the North American market are highly efficient, utilizing Fuji Electric's originally developed RB-IGBT. The small size of the UPS footprint is in the top class, and the units are characterized as having high medium-load efficiency when operating in practical-use regions. (Refer to "Large-Capacity, High-Efficiency 3-Level UPS for North America '7000HX-T3U'" on page 17.)

Our All-SiC module equipped PCS are highly efficient and we have achieved a smaller unit size by optimally utilizing the current and voltage ratings of the power devices. Furthermore, it is now possible to send 1 MW class units as a single integrated unit, whereas in the past we needed to send the unit in sections and then re-assemble them at on-site facilities. By doing this, we have streamlined overall costs including those for installation. (Refer to "Mega Solar PCS Incorporating All-SiC Module 'PVI1000AJ-3/1000'" on page 11.)

In addition, we have been promoting the use of a platform that facilitates the quick development and supply of products that meet customer needs.

5. Postscript

This paper outlined the situation and trends surrounding power electronics, as well as described Fuji Electric's power electronics technology and the state of its applicable product development.

Power electronics have undergone a dramatic evolution with the advance of power devices that make up main circuits as well as control devices such as microprocessors. SiC have become increasingly practical, and it is expected that it will be a key device in creating the next technological revolution. At the same time, the trend in globalization is represented in international standardization, and we believe that standards have the hidden potential for revolutionizing a concept for power electronics technology, as well as business models.

Fuji Electric will continue to offer products and services that meet the diverse needs of society so that we can help build an environmental-friendly and prosperous society.

For "Supplemental Explanation 1 to 5" in this paper, refer to "Supplemental Explanation" on page 68 to 70.

Mega Solar PCS Incorporating All-SiC Module "PVI1000AJ-3/1000"

OSHIMA, Masafumi* MAEDA, Tetsuya* MURATSU, Hiroki*

ABSTRACT

In recent years, solar power generation has come to need greater power generation performance. Power conditioning sub-systems (PCSs) are the core of the generation, and they require high efficiency, reliability to continue to generate electricity, and a reduction of total cost. Fuji Electric has developed a highly efficient PCS for mega-solar plants by incorporating an All-SiC module consisting of silicon carbide metal-oxide-semiconductor field-effect transistors (SiC-MOSFETs) and SiC Schottky barrier diodes (SiC-SBDs), which are the next-generation semiconductors.

1. Introduction

The steady growth in energy demand worldwide has been a factor in big environmental problems such as CO_2 based global warming, and to counter this trend, renewable energy sources, such as photovoltaic cells, have been gaining wider adoption. The "Feed-in Tariff Scheme for Renewable Energy," which was in enacted in Japan in 2012, has created a construction boom for commercial-use photovoltaic power generation stations, also known as mega solar*1. There has also been a growing demand for larger-capacity power conditioning sub-systems (PCSs) in order to realize reduced prices and higher efficiency for power equipment.

In order to correct the voltage fluctuation of photovoltaic cells in residential-use PCS and traditional small- and medium-sized PCS, power conversion is performed twice by means of a configuration composed of a booster circuit equipped with a silicon insulated gate bipolar transistor (Si-IGBT) and an inverter circuit that converts the boosted DC voltage into AC. Since photovoltaic cells produce a high output voltage in the winter when the surface temperature of photovoltaic panels is low and a lower output voltage in the summer when the surface temperature is high, a booster circuit needs to be utilized to maintain a consistent output voltage.

On the other hand, in order to avoid increases in loss by performing power conversion twice, equipment for the PCS for mega solar is generally configured so as to maximize the power generation efficiency of the PCS near the lower limit of the output voltage of photovoltaic cells without the use of a booster circuit. As a result, a situation of uneconomic usage occurs since inverter efficiency decreases between autumn and spring when the output voltage of photovoltaic cells is high.

Therefore, an All-SiC module for the DC booster circuit has been utilized, as well as a reverse-blocking IGBT (RB-IGBT) 3-level power conversion circuit for the inverter, which performs DC-AC conversion. This type of PCS corrects the voltage fluctuation of photovoltaic cells with high efficiency, while enabling high-efficiency inverter operation throughout the year. The All-SiC module that utilizes silicon carbide metal-oxide-semiconductor field-effect transistors (SiC-MOSFET) and SiC Schottky barrier diodes (SiC-SBD), which are the next-generation semiconductors developed under the joint efforts of Fuji Electric and

Fig.1 "PVI1000AJ-3/1000"

* Power Electronics Business Group, Fuji Electric Co., Ltd.

*1: Mega solar refers to a large-scale power station in excess of 1 MW according to the facility-certified power generation scale.

the National Institute of Advanced Industrial Science and Technology. This paper describes the features of the mega solar PCS incorporating an All-SiC module "PVI1000AJ-3/1000" (see Fig. 1).

2. PCS Related Issues

Up until now, power stations have often been set up utilizing a design that configures the total output power of photovoltaic panels and the amount of power capable of being generated by PCS so that they are on the same level. However, feed-in tariff schemes for renewable energy, which are being enacted in countries such as Japan, have facilitated cost reductions in photovoltaic panels, and as a result, there has been an increasing number of power stations that generate power at 1.2 to 1.4 times the generating capacity of PCS by increasing the number of photovoltaic panels arranged in parallel as a method of increasing the capacity factor. In this type of power station, photovoltaic panels produce more power by operating in a state in which current is lower and voltage is higher than the optimal operating point. As a result, a PCS is required that can perform high-efficiency power conversion at a voltage higher than the optimal operating point.

In general, a PCS supplies power to systems by implementing maximum power point tracking control (MPPT control) to control DC voltage and current so that power can be generated at the optimal operating point based on the output characteristics of the photovoltaic panels. When the power generation capabilities of photovoltaic panels and PCS are the same, maximum generating power occurs during the day when sunshine is the strongest. On the other hand, increasing (i.e., accumulation of) the number of photovoltaic panels arranged in parallel creates a situation in which power generation capabilities are higher than the maximum power generation of the PCS. The output characteristics and accumulation of photovoltaic panels in such a case are shown in Fig. 2. Furthermore, maximum generating power would be attained earlier than the time of the day when sunshine is the strongest (see Fig. 2 (a)). By accumulating a large number of photovoltaic panels, the amount of daily power generation can be increased by extending the period in which maximum power can be generated. Photovoltaic panels are in a state of open-circuit voltage V_{oc} early in the morning before power generation begins. Since MPPT control causes operation to move away from V_{oc} and toward the optimal operation voltage V_{pm}, photovoltaic panels enter an operating state that is always higher than the optimal operating point. (see Fig. 2 (b)).

The converter experiences 2 types of loss, namely, conduction loss and switching loss. For the inverter circuit, switching loss is increased in proportion with the DC intermediate voltage of the inverter. Since conduction loss does not change when the output voltage

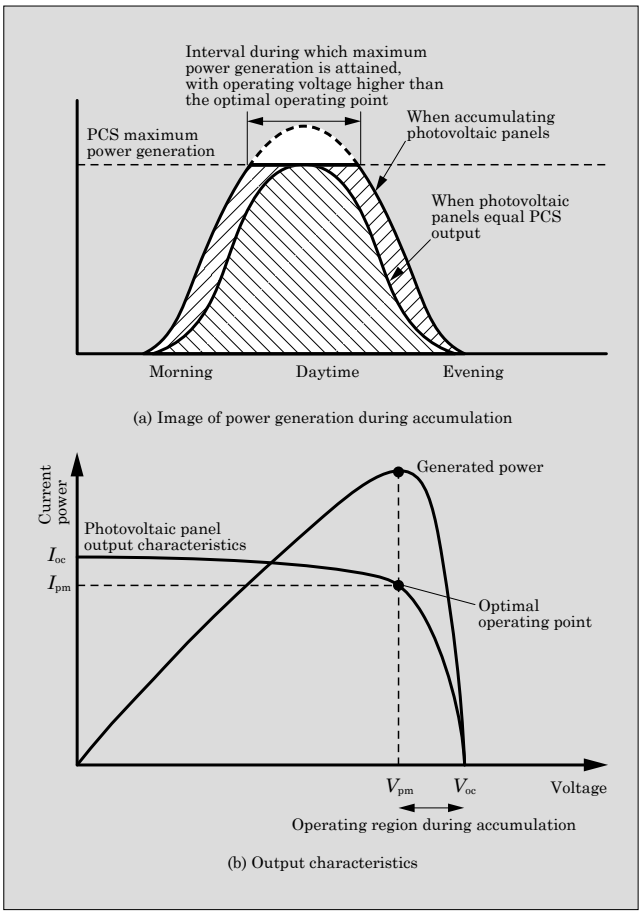

Fig.2 Accumulation of photovoltaic panels and output characteristics

and current for the inverter are the same, switching loss increases and conversion efficiency decreases as the DC intermediate voltage increases. Up until now, PCS for mega solar have suffered from the problem of decreased efficiency as a result of inverter-only conversion. This is due to several factors including the following: direct connection of the output of photovoltaic panels has often been made to the DC intermediate of the inverter circuit; accumulation of more photovoltaic panels creates more opportunities to generate power at a voltage higher than the optimal operating point of the photovoltaic panels; and there is a voltage increase, including open-circuit voltage and optimal operating voltage, for the photovoltaic panels between autumn and spring when daytime temperatures are not very hot.

3. Features of the "PVI1000AJ-3/1000"

There is an increasing demand for highly reliable PCS capable of continuous power generation, without bringing about significant losses to power generation businesses, which include the issues mentioned in Chapter 2. Therefore, the following 3 features are required of PCS.

(a) High efficiency (higher than optimal operating

point)

(b) Low total cost

(c) High reliability (power generation continuity)

The PVI1000AJ-3/1000 is a PCS for mega solar that achieves all of these.

3.1 High efficiency

The unit has utilized a booster circuit to raise equipment efficiency in relation to the accumulation of photovoltaic panels. If there is no change in the load for the booster circuit, a low DC input voltage for the booster circuit will create conduction loss and switching loss, but since there is a decrease in current when there is an increase in voltage, there will also be a decrease in conduction loss and switching loss. By optimizing the relationship between loss characteristics and inverter efficiency in the boosted state, the equipment is characterized as having increased efficiency in proportion with increases in the DC input voltage. The DC input voltage of the booster circuit corresponds to the output voltage of photovoltaic panels, and as a result, it is possible to apply this characteristic to the accumulation of photovoltaic panels and seasonal changes.

The product has raised the efficiency of the chopper by mounting an All-SiC module (see Fig. 3) on the booster circuit, as well as makes use of an advanced T-type neutral-point-clamped (AT-NPC) 3-level IGBT for the T-type 3-level power conversion circuit of the inverter[1].

A comparison of loss characteristics for PCS (existing models) that do not utilize a booster circuit and PCS that do utilize an SiC booster circuit is shown in Fig. 4. If the sum of the total conduction loss and switching loss of existing models at a 460 V DC input voltage is taken to be 100%, there is no change in conduction loss when the DC input voltage rises to 850 V, but switching loss increases from 40% to 68% and total loss increases to about 128%. In PCS equipped with our newly developed SiC booster circuit, loss increases by about 17 points compared with PCS with no booster circuit when the DC input voltage is 460 V, but when the DC input voltage rises to 850 V, loss improves by

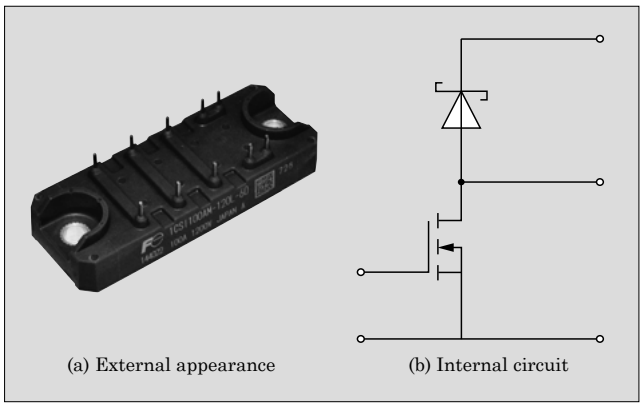

Fig.3 All-SiC module

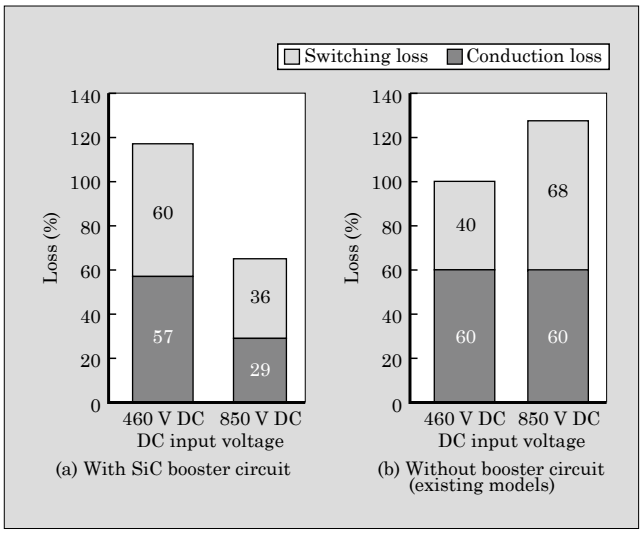

Fig.4 PCS loss comparison

35 points.

As a result, equipment can achieve a maximum efficiency of 98.8% (IEC 61683 efficiency tolerance, not including internal power supply).

3.2 Total cost reduction

Conventional PCS for mega solar have often directly connected the DC voltage of photovoltaic panels with the DC intermediate of the inverter circuit, and as a result, fluctuations in the voltage of the photovoltaic panels would also cause fluctuations in the DC intermediate voltage of the inverter circuit. On the other hand, since the voltage of photovoltaic panels fluctuates between the open-circuit voltage and the optimal operating voltage, the low temperatures in winter months raise the open-circuit voltage, whereas the high temperatures in summer months lower the optimal operating voltage. Therefore, the inverter circuit needs to operate regardless of whether the optimal operating voltage is low or the open-circuit voltage is high.

For example, if the DC intermediate voltage (optimal operating point for photovoltaic panels during summer months) of the inverter is around 340 V, it can only output 200 V (282 V peak) of AC voltage. The output power of the inverter circuit depends on the AC output voltage and current of the inverter, but if the DC intermediate voltage of the inverter can rise from 340 V to about 800 V, the AC output voltage will rise to 400 V, thus enabling output power to achieve a twofold increase using a conventionally used inverter circuit.

Therefore, a booster circuit can be used to increase the DC intermediate voltage of the inverter circuit, and thereby, increase the output voltage and output power of the inverter, which, in turn, improves the capacity factor of the inverter circuit. Furthermore, by increasing the output capacity to 1 MW, total cost reductions can be achieved since it will be possible to reduce the number of PCS used for the mega solar, as well as the

amount of equipment used to implement medium-voltage linkage.

3.3 High reliability

The main circuit for the chopper consists of 12 units, each with a 83 kW output. If any of the units fails, the faulty unit automatically shuts down, while operation for the system can continue to operate. This type of functionality improves power generation continuity by making it possible to avoid the complete shutdown of the system. The faulty unit can be identified through the monitoring or main body display screen, and since the system is based on a plug-in design, it is easy to replace the unit and quickly restore full capacity. Furthermore, if a serious failure occurs such as a blown fuse, operation can continue at a degraded level after the faulty unit is removed manually.

3.4 Generated power improvements

(1) MPPT control based on 2 systems

PCS for mega solar have conventionally implemented MPPT control in a collective manner for multiple DC inputs. This product has been designed to improve the amount of power generation by the chopper circuit performing MPPT control for 4 inputs in units of 2 inputs (500 kW).

(2) Rated output power with an output load power factor between 0.9 and 1.0

Increases in power generation through the use of renewable energies, including photovoltaic power generation, can cause fluctuations in system voltage, and as a result, there needs to be a method for properly maintaining the system. In particular, photovoltaic power generation equipment is often installed at locations far away from the area of power consumption, and if the amount of power sent to the system is larger than the amount consumed, it will cause the system voltage to rise. Therefore, in order to suppress increases in distribution system voltage, it is recommended by power companies to suppress the voltage by injecting a reactive power into the system from a PCS. For example, in the case of Fuji Electric's conventional PCS (1,000 kVA, 1,000 kW), if the power factor is 0.9, PCS capacity becomes 1,000 kVA, 900 kW, which means that the rated power of 1,000 kW cannot be output. Our new product enables the suppression of voltage rise in distribution systems without degrading the amount of generated power by setting the output rating at 1,111 kVA, 1,000 kW so that the rated output power can be generated at an output load power factor between 0.9 and 1.0.

3.5 Indoor type structure and miniaturization of equipment

(1) Indoor type structure

When this product is installed outdoors, it adopts an indoor type structure that is used while mounted to a container. By changing the specifications to correspond to the container, the unit is capable of being installed in coastal areas (areas susceptible to salt damage), which is something that was not possible for our outdoor type PCS "PVI1000."

(2) Compact equipment

By integrating the choppers into the unit structure and optimizing the inverter circuit, we have been able to reduce the outer dimensions (footprint) by about 60% compared to installations that adopt 2 of our conventional "PVI750-3/500-T" (500 kW output PCS) units. Interleaved control is possible for each of the chopper units, and the size of the main circuit has been reduced. Furthermore, the switching frequency has been set to 20 kHz in consideration of balancing switching loss[(2)]. These enhancements have decreased switching ripple, and we have achieved compact size for the chopper unit by reducing the size of the filter.

3.6 Specifications

Table 1 lists the specifications for the PVI1000AJ-3/1000. The DC voltage range corresponds to 1,000 V DC, and the maximum power point tracking range at rated output is 460 to 850 V. The AC output voltage is 480 V, and the interconnection transformer increases the system voltage at each site.

Table 1 "PVI1000AJ-3/1000" specifications

Item	Specification
Output capacity	1,111 kVA/1,000 kW
DC voltage range	450 to 1,000 V
MPPT range	460 to 850 V
Maximum input current	2,440 A
AC voltage	480 V (±10%)
Frequency	50/60 Hz
Power factor	0.9 to 1.0 (rated output) 0.8 to 0.9 (output reduction)
Harmonic distortion rate	5%
Maximum efficiency	98.8%
EURO efficiency	98.5%
External dimensions	W2,980 × D900 × H1,950 (mm)
Mass	2,850 kg

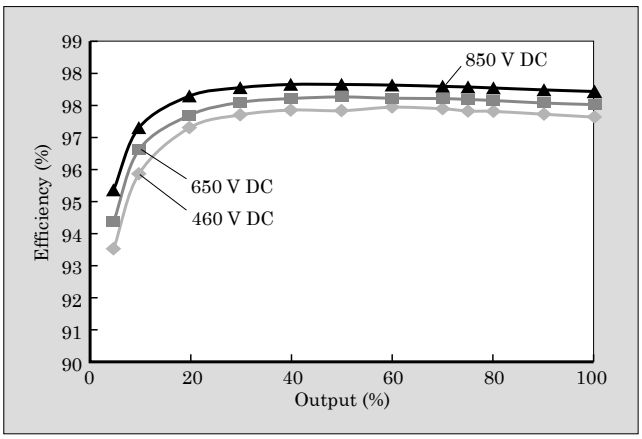

Fig.5 Efficiency curve

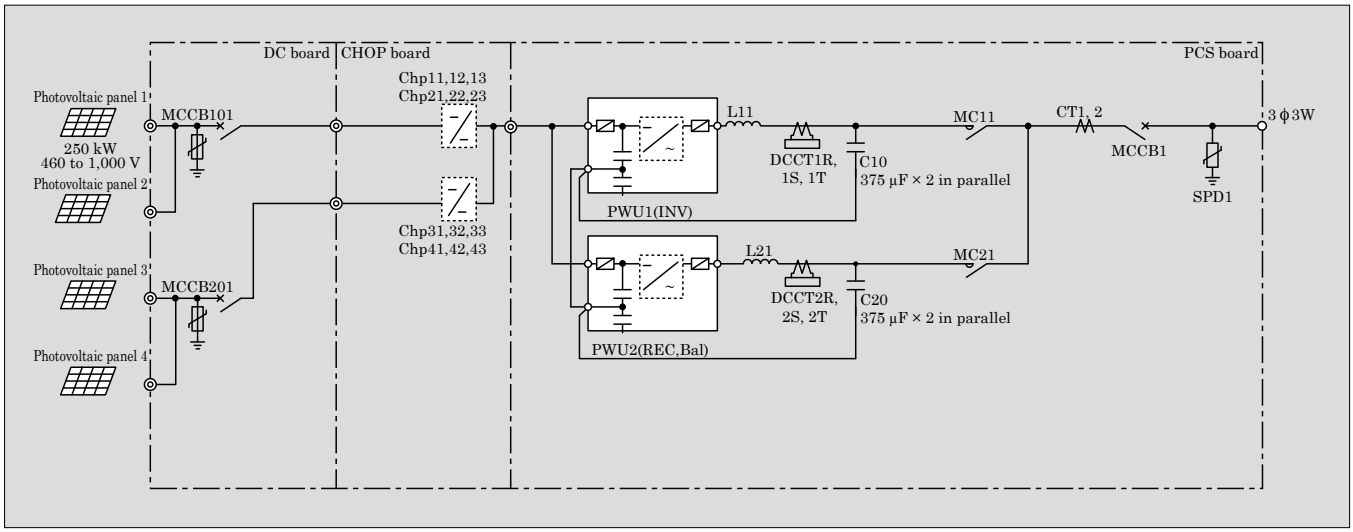

Fig.6 "PVI1000AJ-3/1000" circuit configuration

Maximum efficiency is 98.8% and EURO efficiency (stipulated in the European Union as being closer to actual operation efficiency) is 98.5% when the DC voltage is 850 V. The relationship between output power and efficiency is shown in Fig. 5. Efficiency increases as the input voltage rises.

3.7 Circuit configuration

The circuit configuration for the PVI1000AJ-3/1000 is shown in Fig. 6. It consists of twelve 83 kW chopper units and two 500 kW inverter units. The figure shows a set up of 4 circuits for the DC input, but an optional DC input panel makes it possible to have up to 24 circuits.

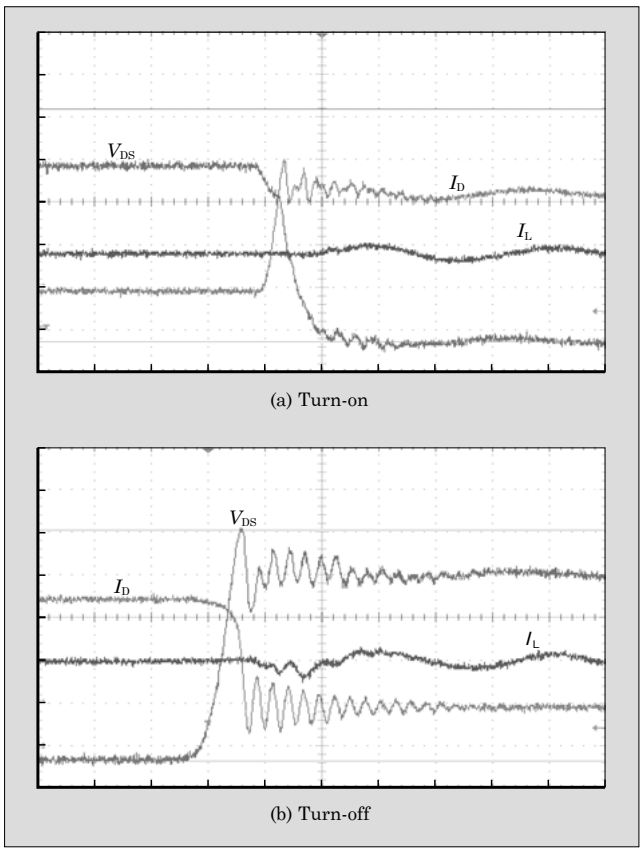

Fig.7 SiC-MOSFET switching waveform

3.8 Reduced induction

Since the All-SiC module eliminates the need for the bonding wire between the chip and the terminal[3], inductance is lower than previous models. Furthermore, a printed circuit board is used to configure the main circuit terminal, and this has a lower inductance than screw terminal type connection methods. These enhancements make switching speed faster than previous models, while also suppressing bouncing voltage during turn-off. The switching waveform of the SiC-MOSFET with a DC voltage of 850 V and switching current of 100 A is shown in Fig. 7. Turn-off time is within 100 ns, which is less than 10% of that of Si-IGBT as a result of reduced induction, and bouncing voltage is on the same level as Si.

4. Postscript

The "PVI1000AJ-3/1000"*2 achieves high-efficiency power generation as the first PCS for mega solar to utilize an All-SiC module. This PCS is optimized for mega solar, reducing system costs through its single-unit high capacity, while also increasing the environmental resistance of the unit through the use of a storage container.

In the future, we will continue to work to develop products with higher efficiency and capacity in order to contribute to the realization of a low-carbon society.

*2: "PVI1000AJ-3/1000" is eligible for the "FY2015 (64th) Electrical Industry Technology Achievement Award" of the Japan Electrical Manufacturers' Association

References

(1) Fujii, K. et al. “PVI1000”: Outdoor High-Efficiency Power Conditioners for Mega Solar Projects. FUJI ELECTRIC REVIEW. 2012, vol.58, no.4, p.202-206.

(2) Matsumoto, Y. et al. “Power Electronics Equipment Applying SiC Devices. FUJI ELECTRIC REVIEW. 2012, vol.58, no.4, p.212-216.

(3) Hinata, Y. et al. “Full SiC Power Module with Advanced Structure and its Solar Inverter Application”, Conference Proceeding on Applied Power Electronics Conference and Exposition (APEC), 2013.

Large-Capacity, High-Efficiency 3-Level UPS for North America "7000HX-T3U"

KAWASAKI, Daisuke* HAMADA, Ippei* SATO, Atsushi*

ABSTRACT

Due to the development of information and communications systems in the information society in recent years, the data center market is expanding both in Japan and abroad. At the same time, there are increasing needs for uninterruptible power systems (UPSs) to ensure stable system operation. "7000HX-T3U," which has been developed for the North American market, is a large-capacity, high-efficiency UPS using a 3-level power conversion circuit with a rated voltage of 480 V. By using Fuji Electric's original AT-NPC 3-level insulated gate bipolar transistor (IGBT) module, the UPS has achieved a maximum efficiency of as high as 97%. It provides high reliability, as with the conventional models, and also supports UL and NEC standards which must be complied with in North America.

1. Introduction

Information communication systems, such as those used in communication equipment and networks, have an indispensable role in today's information-driven society. Social activities could be significantly impacted if these systems were to stop working, and stable operation is thus an absolute requirement.

An uninterruptible power system (UPS) plays a major role in information communication systems, and it is an essential piece of electrical equipment needed in supplying a stable source of power in data centers 24 hours a day, 365 days a year. In recent years, the market size and growth rate of data centers, while still comparatively small in Japan, has been growing in Asia and North America, and it is expected that considerable growth will be sustained into the future.

Fig.1 "7000HX-T3U" (400 V, 500 kVA)

* Power Electronics Business Group, Fuji Electric Co., Ltd.

Fuji Electric has developed UPSs for the Japanese, Asian and North American markets.

This paper describes the "7000HX-T3U," a high-efficiency UPS with a high-capacity rated voltage of 480 V developed for use in the North American market (see Fig. 1).

2. Features

2.1 Compliance with North American standards

When developing products for use in North America, it is strictly required that they be compliant with the product safety standards of Underwriters Laboratories Inc. (UL standards), as well as the standards related to cable laying prescribed by the National Fire Protection Association (NEC standards). In order to make the UPS described in this paper compliant with these standards, we carried out the selection and development of new device components.

2.2 High efficiency

The current model maintains the world's highest level of efficiency at 97%, being based on the exact same features as the "7000HX-T3," a previous product developed for the Japanese market. The high equipment efficiency not only decreases the power loss of the UPS, but also reduces the power consumption of air conditioning equipment used to cool the UPS.

Since equipment in a data center adopts dual and redundant configurations to improve reliability of the system, it operates at a low load factor. Power loss is also reduced in the low load range (20% to 50%) during normal operation.

2.3 High reliability

In data centers, the UPS needs to continuously supply power 24 hours a day, 365 days a year. This

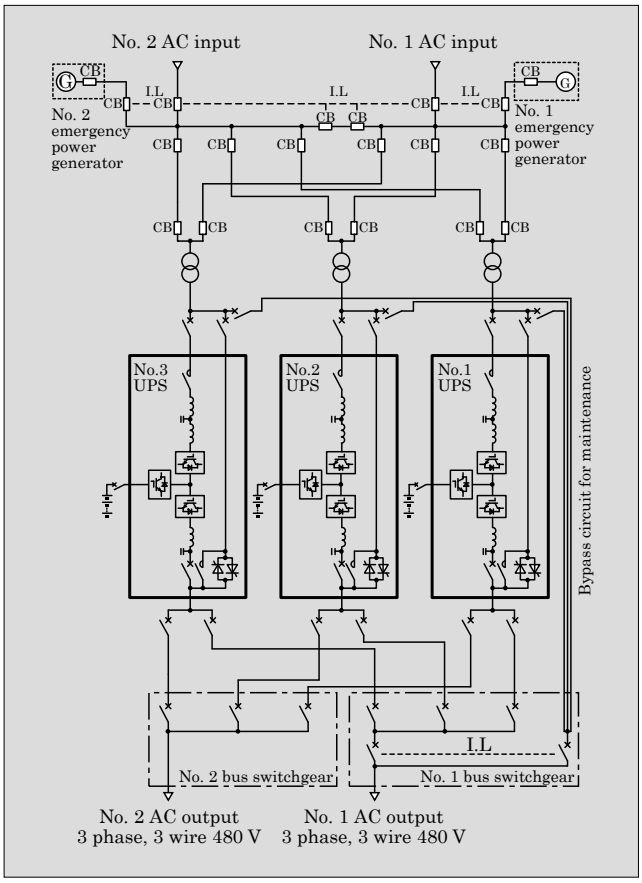

Fig.2 System configuration of parallel redundant operation system (completely independent double bus system)

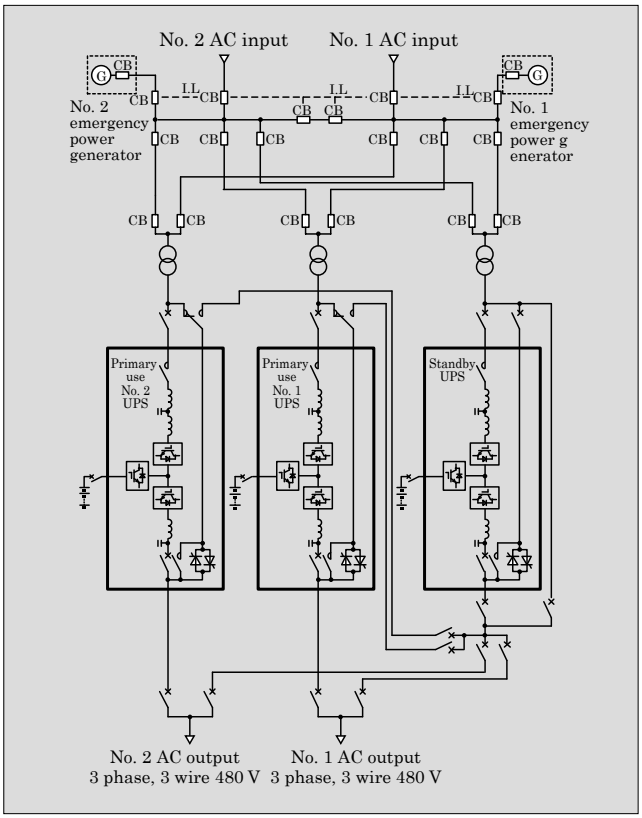

Fig.3 System configuration of standby redundant operation system

model supports a parallel redundant operation system and a standby redundant operation system, which ensure continuous power supply during time of maintenance and equipment failure. The typical system configurations for each of these systems are shown in Fig. 2 and Fig. 3.

2.4 High performance and high functionality

(1) Support for high power factor load

In recent years, an improved power factor has been required by standards such as those enacted by the International Energy Star Program*1, and the number of electronic devices that adopt a PFC circuit for implementing power factor correction has been increasing. This product, therefore, supports to loads with a power factor of 1.0 (500 kW) in order to supply power to such equipment that uses the PFC circuit without reducing their power capacity.

*1: The International Energy Star Program (Energy Star) is an international environmental labeling system for ensuring energy savings in electrical equipment. It is being managed under the mutual recognition of the Ministry of Economy, Trade and Industry in Japan and the United States Environmental Protection Agency. The program includes a wide range of products such as home appliances, industrial machines and computers.

(2) Power walk-in function

When the UPS switches from battery based power supply (operation during power failure) to emergency generator based power supply, the power walk-in function gradually changes the power sources. This function allows emergency generators to prevent hunting and suppress voltage fluctuation due to sudden load changes.

(3) Web/SNMP card

Connecting to a network via the Web/SNMP card, users can monitor the operating state of the UPS from a standard web browser and receive failure information by email.

Moreover, using dedicated monitoring software, they can also monitor output power trends and operating history and failure history of the UPS.

(4) MODBUS*2 card

A newly developed option card supporting MODBUS makes it easy to monitor UPS data by connecting to the networks of customer equipment. By selecting either the MODBUS card or Web/SNMP card, wide-scale compatibility can be achieved with the communication systems of customer equipment.

*2: MODBUS is a trademark or registered trademark of Schneider Automation, Inc., France

3. Specifications

Figure 4 shows the outer dimensions of the 7000HX-T3U, and Table 1 lists the specifications. By adopting a 3-level power conversion circuit, we have been able to decrease loss while also reducing the size of the filter circuit. These enhancements have enabled us to achieve a reduced size and weight of equipment.

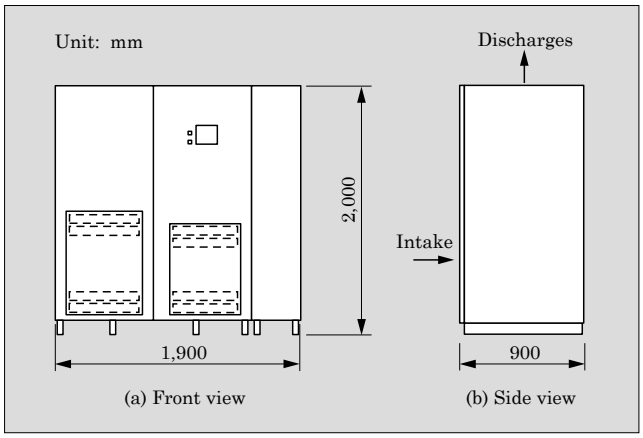

Fig.4 Outer drawing of the "7000HX-T3U"

Table 1 "7000HX-T3U" specifications

Item		Specification
Feeding method		Normal inverter feeding
Rated output capacity		500 kVA/500 kW
Equipment max. efficiency		97%
Power failure switching time		Uninterrupted
Mass		1,800 kg
AC input	Number of phases	3 phase, 3 wire
	Voltage	480 V+10%, – 20%
	Frequency	60 Hz±5%
	Power factor	0.99 (delay) to 1.0
	Current harmonic distortion rate	3% or less
Bypass input	Number of phases	3 phase, 3 wire
	Voltage	480 V±10%
DC input	Nominal voltage	480 to 528 V (Equivalent to 240 to 264 lead-acid batteries)
AC output	Number of phases	3 phase, 3 wire
	Voltage	480 V
	Frequency	60 Hz
	Load power factor	1.0
	Voltage precision (at steady state)	Within ±1%
	Transient voltage fluctuation	±3% or less (load 0 ⇔ 100%)
	Settling time	50 ms or less
	Voltage waveform distortion rate	2% or less (linear load) 5% or less (non-linear load)
	Frequency precision	Within ±0.01% (during internal oscillation)
	External synchronization range	±5% or less
	Overload capability	125%: 10 min 150%: 1 min

4. Circuit Configuration and Operation

4.1 Overview of main circuit configuration and operation

Figure 5 shows the main circuit block diagram. This model adopts a double conversion system consisting of a rectifier to convert AC to DC and an inverter to convert DC to AC. A chopper is connected to the DC input to carry out charge/discharge control of the storage battery.

In the normal operating state, in which the AC input is within the normal range, stable power with a constant voltage and constant frequency is supplied to the load via the inverter. The rectifier carries out control so that the AC input current of the UPS becomes a sine wave with a power factor approximately equal to 1, while the chopper charges the storage battery. If there is a power failure for the AC input, the chopper raises the voltage of the storage battery to an appropriate DC voltage, and the inverter supplies power after converting it to stable AC power. Figure 6 shows the waveform at power failure and power restoration. As a result, a continuous and stable output voltage can be supplied even during a power failure.

In addition to the above mentioned operations, the chopper also performs discharge control in a mode that simultaneously supplies power to a load from both the input and the battery during overload, input voltage

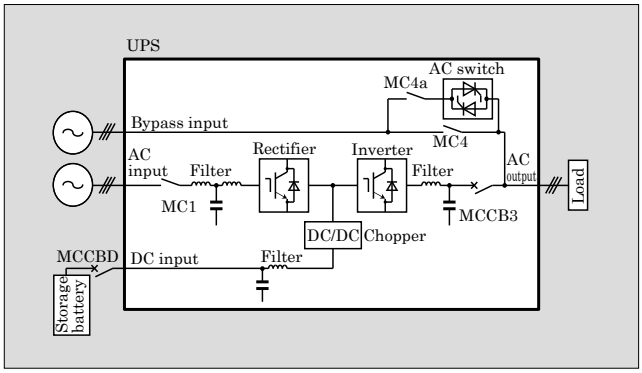

Fig.5 Main circuit block diagram

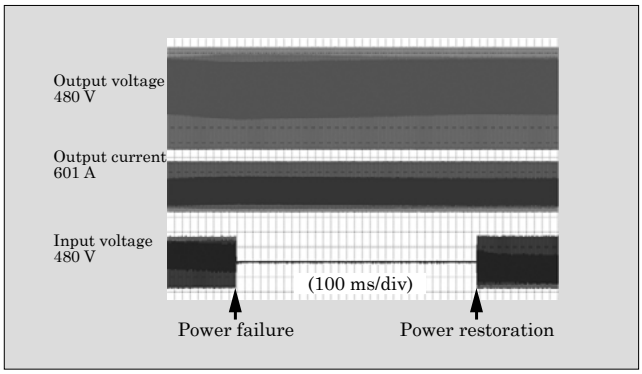

Fig.6 Waveform at power failure and restoration

drop and restoration power walk-in.

4.2 Application of AT-NPC 3-level power conversion circuit

The rectifier and inverter adopt an advanced T-type neutral-point-clamped (AT-NPC) 3-level power conversion circuit*3 as shown in Fig. 7. The semiconductor component used in the conversion circuit utilizes Fuji Electric developed AT-NPC 3-level insulated gate bipolar transistor (IGBT) modules.

The features of the AT-NPC 3-level power conversion circuit are indicated as follows:

(a) Switching voltage is half that of a 2-level power conversion circuit, and as a result, it is possible to reduce the switching loss of the converter, improve power conversion efficiency, save energy and reduce the size of the converter.

(b) Since the switching waveform is step-wise as shown in Fig. 8, it has reduced harmonic voltage compared with 2-level power conversion circuits. As a result, loss caused by filter circuit harmonics is reduced, and this reduces fixed loss (no-load loss) and improves efficiency in the low load range while also making it possible to reduce the size of the reactor and capacitor.

(c) Noise generated by switching can be reduced compared with 2-level power conversion circuits.

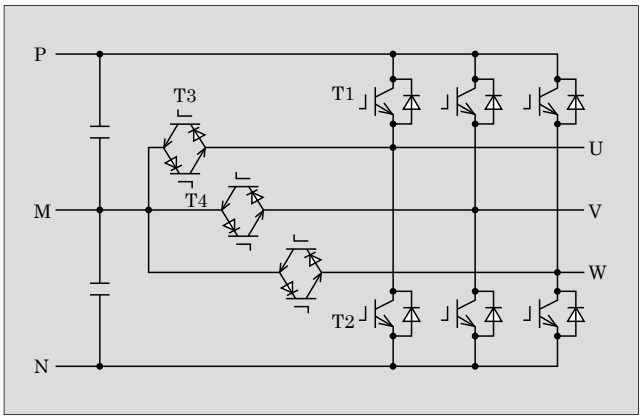

Fig.7 AT-NPC 3-level power conversion circuit

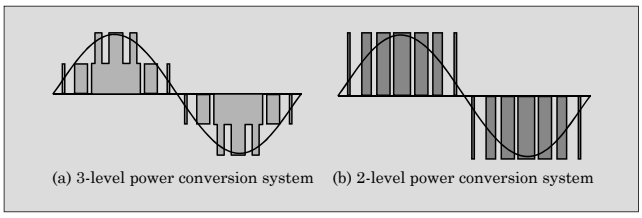

Fig.8 Comparison of switching waveforms

*3: For more details on the 3-level power conversion circuit, refer to "3-Level Power Conversion" on page71 [Supplemental explanation 6].

4.3 Applicable to 480 V AC rating

Since the rated line voltage of this model is 480 V, it needs to output a voltage higher than the typical 415 V output by converters manufactured for the Japanese market. To achieve this, it is generally necessary to change the withstand voltage of the component used in the semiconductor power converter, but this model allows the use of the same component used in products manufactured for the Japanese market by adopting a trapezoidal wave modulation system as the control system (see Fig. 9).

Trapezoidal wave modulation enables the output of a line voltage that is higher than sine wave modulation even when the peak of the phase voltage and the sine wave are the same. Since the withstand voltage of the semiconductor component is determined by the phase voltage, the utilization of trapezoidal wave modulation makes it possible to obtain a high line voltage even when using a component with a low withstand voltage. Furthermore, since DC voltage is low, the switching loss of the semiconductor can also be reduced.

4.4 Efficiency and loss

The efficiency characteristics during AC-AC op-

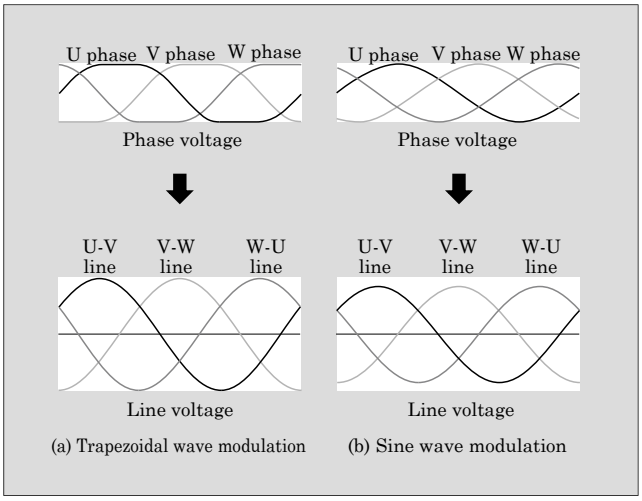

Fig.9 Voltage waveform of rectifier and inverter

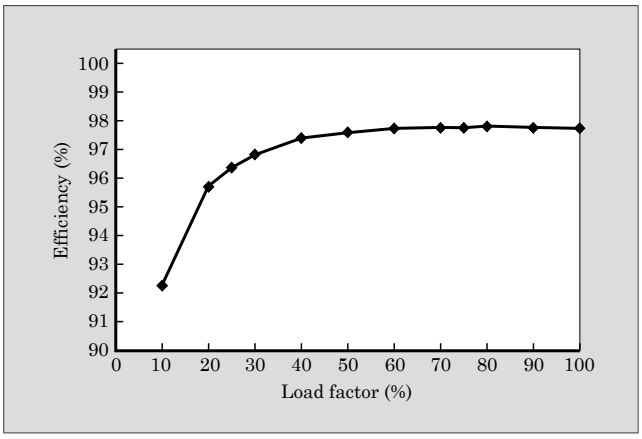

Fig.10 Efficiency characteristics during AC-AC operation

eration for this model are shown in Fig. 10. When the load factor is between 20% and 100%, maximum efficiency is above 97% and minimum efficiency is above 95%. In other words, efficiency is high even when the actual operation load is low, and this, in turn, produces high energy savings.

5. Postscript

In this paper, we introduced the "7000HX-T3U" AT-NPC 3-level large-capacity, high-efficiency UPS for the North American market. The model is compliant with North American standards and various power management systems, and it can be expected to be adopted for a wide range of power supply applications that require safety, high reliability and a low environmental burden.

We will continue pursuing energy savings and globally-compliant features for our power supply products so that we can meet the expectations of our customers.

General-Purpose Inverters Meeting Global Standards "FRENIC-HVAC/AQUA Series" and "FRENIC-Ace Series"

KONO, Hiroyuki* MIGAKI, Takumi* KAIMI, Takashi*

ABSTRACT

In recent years, general-purpose inverters have been required to be multi-functional. Even in the areas where dedicated controllers or specialized variable speed drives were conventionally used, in an increasing number of cases customized general-purpose inverters are being adopted. The demand for product globalization is also increasing. To satisfy these needs, Fuji Electric has developed the "FRENIC-HVAC/AQUA Series" and "FRENIC-Ace Series" general-purpose inverters that meet global standards. These products are supporting our globalization by featuring a customized logic function as standard and introducing multi-language support and region codes. They also comply with international standards regarding noise immunity and functional safety.

1. Introduction

General-purpose inverters are utilized for a wide range of applications including energy saving in fans and pumps, and power saving and automating industrial machines. Fuji Electric offers a diverse line-up including a simple variable-speed series, with little load fluctuation suitable for fans and pumps, and a series equipped with high-performance vector control ideal for up-down conveyors.

The newly developed "FRENIC-HVAC/AQUA Series" and "FRENIC-Ace Series" have been designed for global market and standards but also conformed to the international standards that are applied to the end products to which the inverters are to be built. This paper describes these inverters.

2. Expansion of Features for Global Market

2.1 Multi-language support function

One function required for globalization is to have a multi-language display. For users, being able to see indications in their own language when they want to verify inverter information such as function codes leads to a reduction in the number of accidents caused by misconfiguration or wrong understanding, and also makes it easier to read the display.

Traditionally, Fuji Electric's inverter series has provided interfaces in basically 6 languages including Japanese for customers in different regions. The number of languages available for the FRENIC-HVAC/AQUA Series has been increased to 19 to lower the language barrier. The 19 languages are as follows: Japanese, English, German, French, Spanish, Italian, Chinese, Russian, Greek, Turkish, Polish, Czech, Swedish, Portuguese, Dutch, Malay, Vietnamese, Thai and Indonesian.

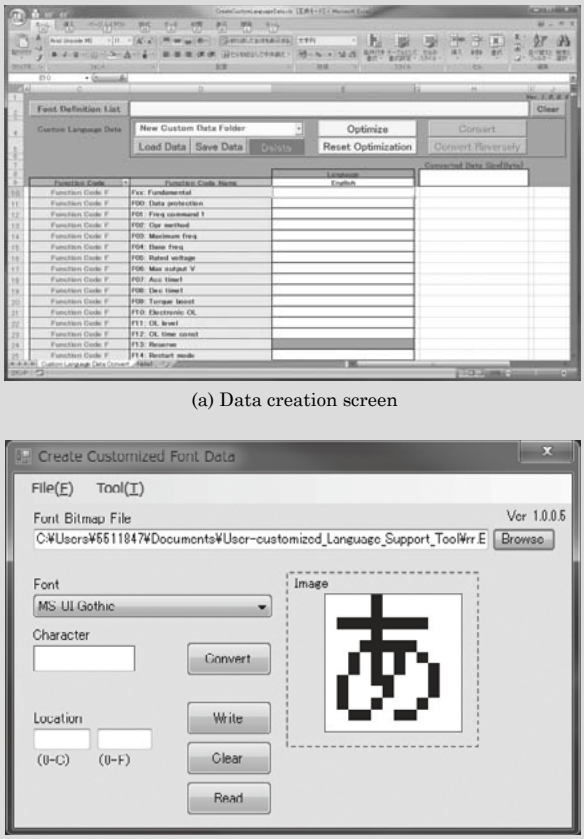

(a) Data creation screen

(b) Character editing screen

Fig.1 Editing screen of User-Customized Language Support Tool

* Power Electronics Business Group, Fuji Electric Co., Ltd.

2.2 User-Customized Language Support Tool

Characters to represent these 19 languages may also be used for languages other than the 19 but many languages require unique characters. In addition, terms may vary even in the same English-speaking world and the representations normally used by Fuji Electric may not always be easy for users to understand.

To address this problem, we have developed User-Customized Language Support Tool that meets all character-display needs. Figure 1 shows an example of the editing screen of this tool. The data creation screen shown in Fig. 1 (a) allows the user to set subtle linguistic expressions. Characters created by using the character editing screen shown in Fig. 1 (b) can be saved as character data, which makes them available for languages other than the 19 previously mentioned.

2.3 Introduction of regions codes

Fuji Electric's inverters have previously offered 7 models with different language and power supply specification (voltage and frequency) settings and terminal shapes and specifications for different regions of Japan, Asia, China, Taiwan, Europe, North America and Korea.

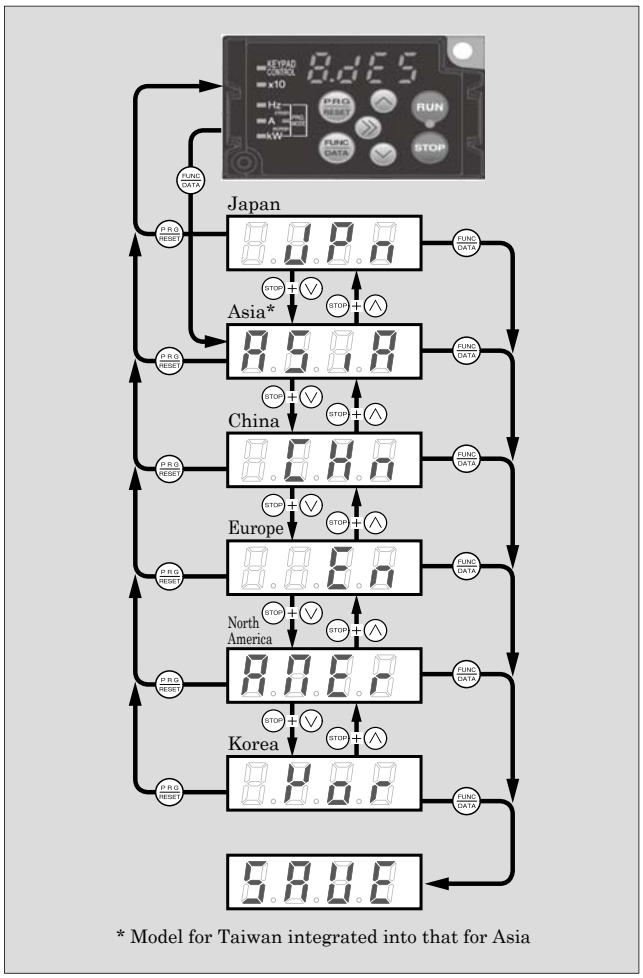

Fig.2 Region code setting

However, inverters shipped to various regions may be installed on users' machinery and equipment, and then often shipped in turn to other regions. This generated problems such as a difficulty in procuring products with the same specifications in the end-destination regions, and different terminal shapes and specifications puzzled operators and users, who have called for easier local procurement and standardization of specifications.

To deal with these challenges, we have prepared global models, in which hardware configurations of the existing products for the global market are integrated and standardized. The language and power supply specification (voltage and frequency) settings, which were traditionally factory-configured for different models for different regions, have been simplified to an automatic setting that the user can set merely by selecting a region code at the time of use, as shown in Fig. 2.

This integration and standardization have achieved a significant reduction in the number of models for the global market to one-third of the conventional models and streamlined the user's global procurement and inventory management while simplifying the setup operation.

2.4 Customized logic function enhanced and provided as standard feature

With the FRENIC-Ace Series, the significantly-enhanced customized logic function is provided as a standard feature (see Fig. 3).

Traditionally, end users' needs have been difficult to meet with standard inverter models, and specialized features demanded by manufacturers of assembled products have been served by using special products with the enhanced software functions of the inverters themselves and external control devices. The FRENIC-Ace Series, with the extended customized logic function provided as a standard feature, is capable of supporting these applications simply in standard inverter models (see Fig. 4). This has made it possible for engineering departments of sales hubs in various parts of the world, system integrators, machine builders and end users to program themselves.

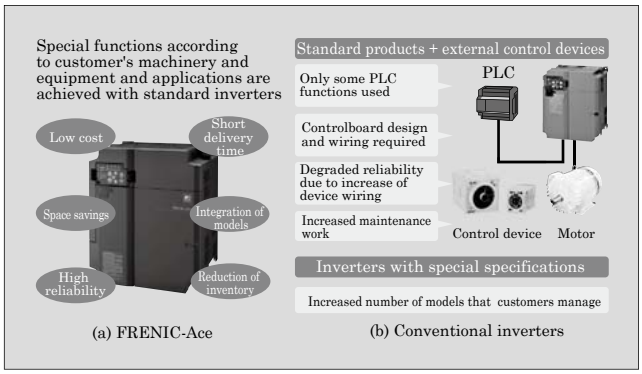

Fig.3 Customized logic function

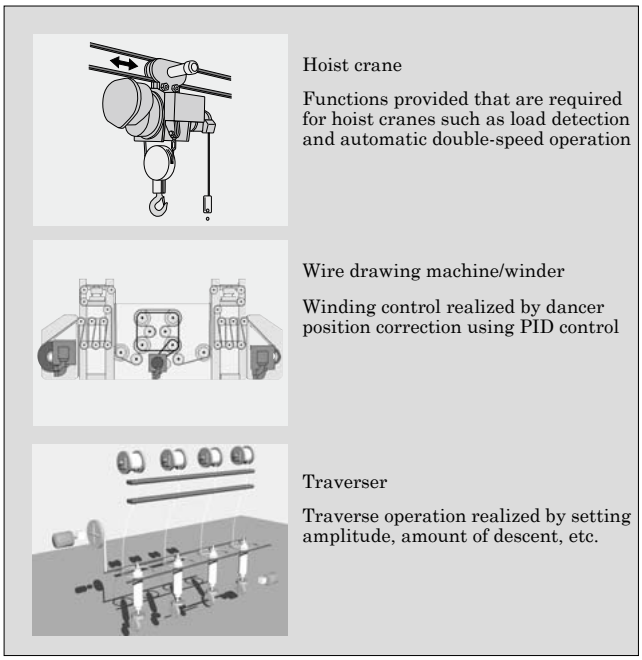

Fig.4 Examples of application of customized logic function

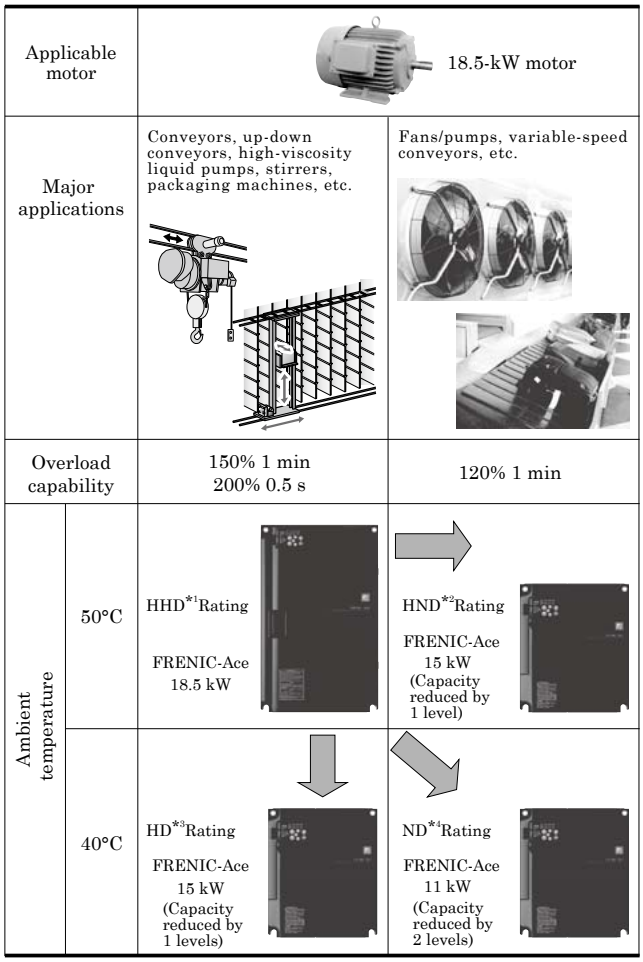

*1 HHD: High carrier frequency heady duty
*2 HND: High carrier frequency normal duty
*3 HD: Heavy duty
*4 ND: Normal duty

Fig.5 4 types of overload capacity

2.5 4 types of overload capacity

The FRENIC-Ace Series offers 2 options for "overload capacity" types, a high carrier frequency heavy duty rating (HHD rating) and high carrier frequency normal duty rating (HND rating), selectable according to the machines and devices used. It also offers 2 types of "temperature rating," 40 °C and 50 °C, as the upper limit of ambient temperature at the inverter installation location. This has made it possible for one model to support a total of 4 types of ratings (see Fig. 5).

The high carrier frequency heavy duty rating is suited for up-down conveyors that repeatedly start up and stop at high frequencies in multilevel warehouses, and stirrers for viscous materials and crushers in food processing machines and material processing. The high carrier frequency normal duty rating is suited for applications not requiring much overload capability such as moderate acceleration/deceleration and continuous rotation of fans and pumps, centrifuges, and conveyors. With the high carrier frequency normal duty rating, it is possible to adopt an inverter of one level smaller in capacity than that with the high carrier frequency heavy duty rating to drive the motor of the same output rating. Moreover, in an environment with an ambient temperature of 40 °C, an inverter of 2-level smaller in capacity (ND rating) can be adopted. This makes it easier to use the inverters for fan and pump applications and utility applications, the market of which is globally large.

3. Conformity to International Standards

3.1 International standards for inverters

When exporting inverters, it is essential to conform to the standards of the destination region. For example, conformity to EN61800-3 and EN61800-5-1 for Europe and to UL508C for North America is required. In regions with no original standards such as Asia, conformity to the EN and/or UL standards is a condition of tenders. The FRENIC-HVAC/AQUA Series and FRENIC-Ace Series conform to these standards. Recently, along with the more stringent requirements of standards, conformity to conditions according to the environment of the inverter installation location has come to be required, and the Series have achieved this.

3.2 Conformity to standards according to installation environment

Table 1 shows the standards to which the FRENIC-HVAC/AQUA Series and FRENIC-Ace Series conform.

The FRENIC-HVAC/AQUA Series provides inverters used for fan and pump applications, and the environment of installation locations extend to buildings, stores, stations and other commercial facilities in addition to factories. For installation in factories, it is desirable for the inverter to support longer motor cables. For commercial facilities, the generated noise must be suppressed to satisfy more stringent limit values. For

Table 1 Conformed standards

Series name	Standard	Standard name/condition
FRENIC-HVAC/AQUA Series	EMC*1	EN61800-3*3 C1: Motor cable 10 m C2: Motor cable 75 m/150 m C2/C3: Motor cable 30 m EN50121-5
	Momentary power failure tolerance	SEMI F47-0706
	Safety	EN61800-5-1 UL508C
	Functional safety	–
FRENIC-Ace Series	EMC*2	EN61800-3*3 C2: Motor cable 10 m
	Safety	EN61800-5-1 UL508C
	Functional safety	ISO13849-1 EN61508-1 to 7 EN61800-5-2

*1 Built-in Filter
*2 External EMC filter
*3 10 m: for general industries
75 m/150 m: for fans and pumps
30 m: for equipment using an earth leakage circuit breaker
C1: for residential and commercial areas
C2: for residential and commercial areas (installed under supervision of an expert)
C3: for industrial environment

installation in stations, compliance with EMC standards for railroad equipment may be required. The products have undergone an assessment to check their conformity to the standards shown in Table 1, which have been selected based on the requirements according to the installation environment.

The FRENIC-Ace Series, intended for machine tools and plant applications, also comply with the functional safety.

When selecting an inverter, users compare the standards that are required for their equipment with the standards that the inverter meets. However, manufacturer's specified conditions based on the EMC standards may differ from user's use conditions. When their conditions do not agree, the user is obliged to prove conformity, and this sometimes placed a significant burden on the user. Recently, manufacturers tend to acquire the certification of inverters intended for fan and pump applications with a representative installation environment. Individual user no longer needs to conduct tests for a conformity assessment, manufacturers, however, need to acquire the certifications with more conditions.

3.3 Design of EMI filter

To ensure one type of inverter conforms to multiple EMC standards, design of an EMI filter is essential. An example of an EMI filter circuit is shown in Fig. 6.

Inverter-generated noise has frequency characteristics with a peak at the LC resonance frequency generated by the self-inductance and capacitance of

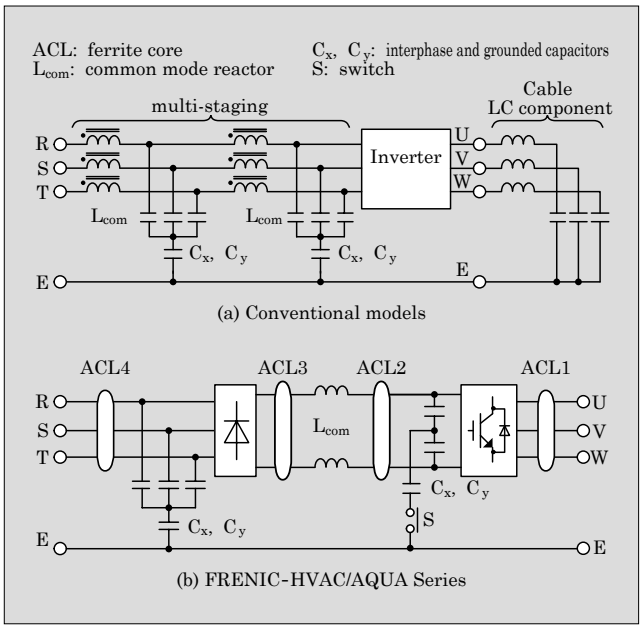

Fig.6 Example of EMI filter circuit

the motor cable. One known design technique for noise filters is to match the frequency that maximizes the attenuation characteristic of the filter with the peak of the noise, thereby allowing for a reduction in the size of the filter. Meanwhile, when the resonance frequency of the inverter-generated noise may vary depending on the cable length, the filter is, conventionally, designed to have high attenuation characteristics over the entire frequency region. One representative example of this is a 2-stage filter as shown in Fig. 6 (a). This design does not readily allow for a size reduction or built-in installation of the filter and may cause excessive attenuation depending on the frequency, and this has been a challenge. In order to solve it, we have made a fundamental revision for the FRENIC-HVAC/AQUA Series and adopted the EMI filter circuit shown in Fig. 6 (b).

In the conventional 2-stage filter, the part that hinders a size reduction is the common mode reactors. The common mode reactor is a cased ferrite core with a winding and its volume and cost account for 70% of the filter, which means that providing 2 stages requires twice as much volume and cost as that of an EMI filter. Accordingly, the FRENIC-HVAC/AQUA Series has not employed the 2-stage filter and has adopted distributed ferrite cores in various parts of the circuit to adjust the impedance of the filter. The ferrite core can be mounted simply by securing naked cores in the existing internal wiring, which makes them a very inexpensive component. In addition, the space in the vicinity of the internal wiring is often empty and addition of ferrite cores hardly increases the volume of the filter. As a result of adjusting the impedance with the ferrite cores, a noise attenuation equivalent to that with a 2-stage filter has been achieved with a volume and cost close to those of a one-stage filter.

The most important point in adjusting the impedance is to select appropriate ferrite cores. For the FRENIC-HVAC/AQUA Series, 30 types of ferrite cores with combinations of different core materials and sizes were prepared as candidates, and one of them has been selected to achieve the required impedance with the smallest possible size at each location. By changing the combination of material and size, attenuation can be adjusted without changing the circuit configuration. The built-in EMI filter that allows one inverter to meet multiple cable conditions has been realized for all capacity specifications of the FRENIC-HVAC/AQUA Series.

3.4 Conducted emission

Figure 7 shows the result of measuring conduct emission of the FRENIC-HVAC/AQUA Series. The noise peak frequencies greatly differ between both standards because of the different motor cables. However, both are shown to be lower than or equal to the limit values of their respective standards. There was almost no frequency band with an overdesign in reference to the standard value. For the waveforms in Fig. 7, switch S in Fig. 6 (b) is in the ON state and connecting a large-capacity grounded capacitor provides the high attenuation characteristics required for conforming to the C1 and C2 standards. However, this large-capacity grounding capacitor increases the leakage current of the power supply and may cause failures such as a malfunction of the earth leakage circuit breaker provided on the primary power supply side. Accordingly, for users not requiring support for the C1 standard or long-distance motor cables, opening switch S in Fig. 6 (b) makes it possible to reduce the leakage current and use the inverter with an earth leakage circuit breaker while satisfying the standard.

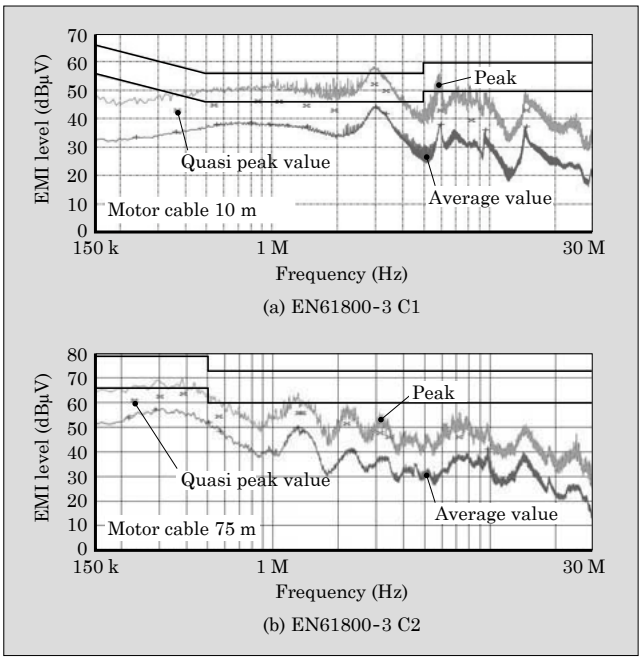

Fig.7 Conduct emission of “FRENIC-HVAC/AQUA Series”

4. Postscript

This paper has presented Fuji Electric’s “FRENIC-HVAC/AQUA Series” and “FRENIC-Ace Series,” general-purpose inverters that meet the global standards. The trends of multi-functionalization and globalization for meeting customer needs are expected to continue in the future. We intend to quickly grasp the trends and work to create truly global products.

690-V Inverters Equipped with SiC Hybrid Module "FRENIC-VG Stack Series"

SATO, Kazuhisa* TAKANO, Makoto* NOMURA, Kazuki*

ABSTRACT

Fuji Electric offers 690-V stack type of the "FRENIC-VG Series" that has the highest-level performance in the industry. The 690-V inverters have seen high demand from the marine industry, overseas chemical plants, mining and water treatment facilities and their conventional capacities were between 90 and 315 kW. Now capacities from 355 to 450 kW have been added to the lineup. Incorporating a SiC hybrid module with low power dissipation prevents the product from becoming larger due to capacity enlargement, and keeps the product width to 220 mm. Connecting multiple stacks in parallel makes it possible to drive multi-winding motors up to 2,700 kW. Having a direct parallel connection enables large-capacity single-winding motors to be driven up to 1,200 kW.

1. Introduction

In recent years, for inverters used in large-scale facilities, such as steel plants and large-sized cranes, there has been increasing demand for larger capacity, improved responsiveness and enhanced precision, as well as space saving and ease of maintenance for installation and replacement work.

To meet these needs, we added 400-V stack-type inverters to the industry's top performing "FRENIC-VG Series"[(1)] line-up in FY2012. Furthermore, in June 2014, we released 690-V stack-type inverters, which were in high demand in vessel equipment, overseas chemical plants, mining and water treatment facilities Figure 1 shows the applications of the products.

This time, we have added the types from 355 to 450 kW in capacity to the 690-V line-up, which originally consisted of the types from 90 to 315 kW in capacity. We have been able to increase the capacity while preventing the inverters from increasing in size by utilizing low-loss SiC hybrid modules. The product's external appearance and an installation example in the panel are shown in Fig. 2.

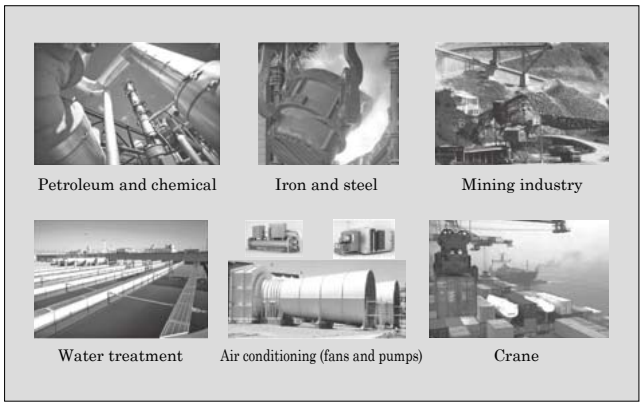

Fig.1 Uses of 690-V inverter "FRENIC-VG Stack Series"

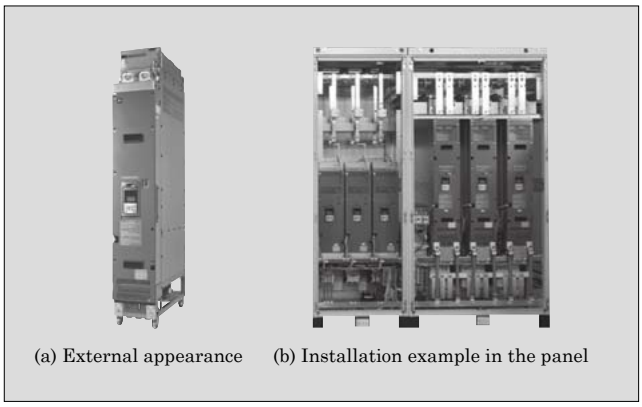

Fig.2 690-V inverter "FRENIC-VG Stack Series"

This paper describes the SiC hybrid module and the "FRENIC-VG Stack Series" of 690-V inverters equipped with the modules.

2. SiC Hybrid Module

The SiC hybrid module incorporated in 690-V stack-type inverters with capacities from 355 to 450 kW is configured with SiC-Schottky barrier diodes (SiC-SBDs) and Si-insulated gate bipolar transistors (Si-IGBTs). It utilizes Fuji Electric's SiC-SBD chip, which has a 1,700-V withstand voltage, and a 6th-generation "V Series" IGBT chip. The external appearance and circuit configuration of the SiC hybrid module are shown in Fig. 3.

2.1 Features of the SiC hybrid module

The SiC hybrid module utilizes SiC-SBD, which is a unipolar device with no minority carrier injec-

* Power Electronics Business Group, Fuji Electric Co., Ltd.

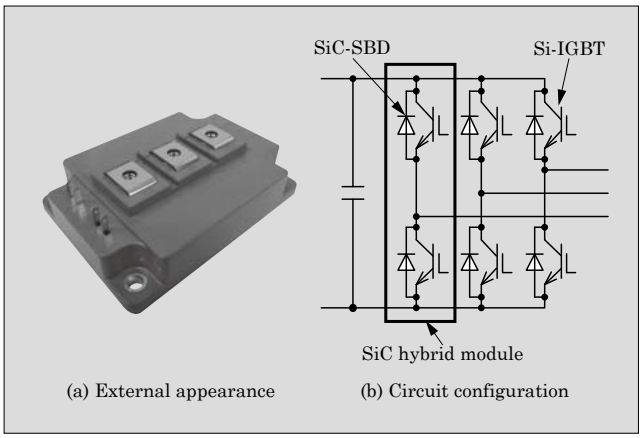

Fig.3 SiC hybrid module

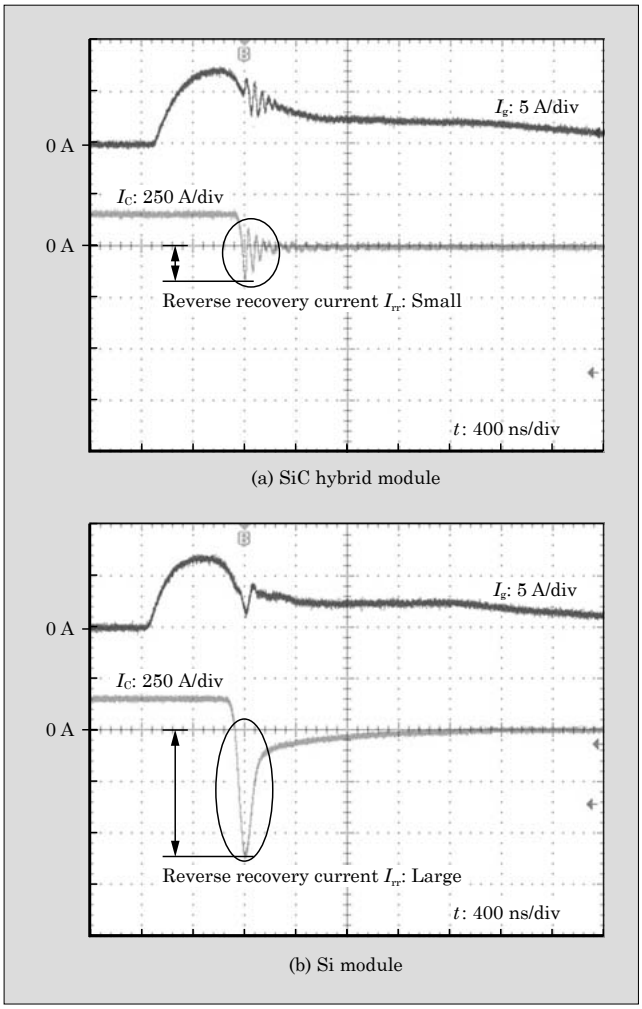

Fig.4 Module reverse recovery current waveform

tion, and therefore, it is characterized as generating almost no reverse recovery loss E_{rr} during switching operations. Figure 4 shows the reverse recovery current waveform of the module. Reverse recovery current is much lower in the SiC hybrid module when compared with conventional Si modules. Furthermore, the reduction in reverse recovery current also leads to reduced turn-on loss E_{on} for opposing arm IGBT.

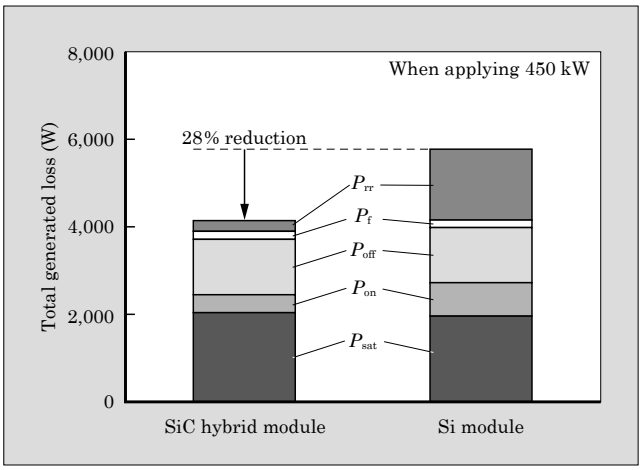

Fig.5 Total generated loss of module

Figure 5 shows a comparison of the total generated loss of an Si module and SiC hybrid module when mounted on a 450-kW stack. The P_{rr} of the SiC hybrid module is approximately 85% less than that of the Si module, while P_{on} is approximately 45% less. Total generated loss has been reduced by 28%, which enables size reduction of equipment and capacity increase.

2.2 Challenges and measures for SiC hybrid module applications

SiC hybrid modules perform switching at a higher speed than Si modules. Thus, when the devices connect in parallel, their appropriate current sharing is needed to operate stably. Furthermore, reducing and equalizing inductance and matching impedance are required to suppress oscillation and reduce EMC noise.

Therefore, we have optimized the current sharing and matched the impedance of the module to that of the gate drive circuit by utilizing an electromagnetic analysis simulation of the wiring inductance (see Fig. 6), thereby allowing the switching while suppressing gate oscillation.

In addition, inverters for overseas markets need to comply with the standards enforced by each export destination. In particular, the following measures are taken to comply with emission noise regulations set

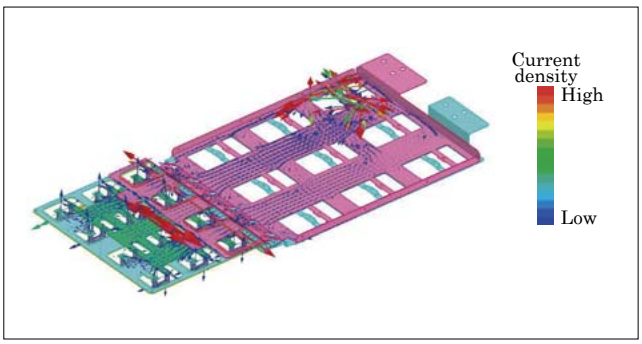

Fig.6 Example of electromagnetic analysis simulation of wiring inductance

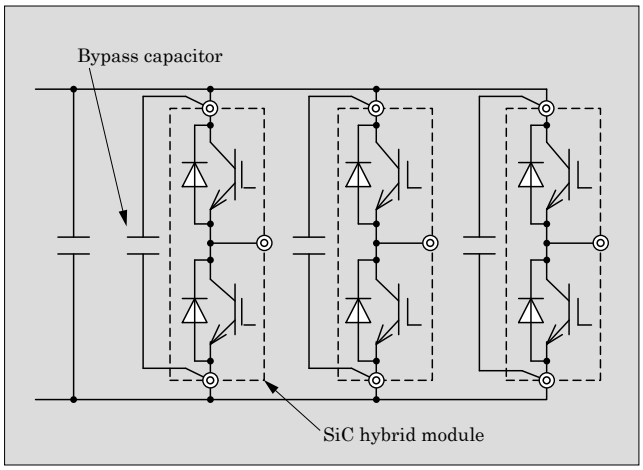

Fig.7 Bypass capacitors connected to SiC hybrid module

forth in the EN61800-3 EMC standard.

Since the SiC hybrid module performs high-speed switching, emission noise generated by the inverter increases. Conventional countermeasures for emission noise include incorporating the inverters into a panel and inserting zero-phase reactors (common mode reactor) into the output cables of inverters. However, such countermeasures taken outside the inverter are not effective enough to reduce the emission noise increased by using the SiC hybrid module.

On the other hand, the amount of emission noise is proportional to the size of the loop (emission area) in which a noise current flows; therefore, implementing measures near the noise source is effective to reduce the size of the loop. Consequently, the FRENIC-VG Stack Series has achieved noise reduction by connecting in parallel bypass capacitors that have good frequency characteristics as close as possible to the noise generating SiC hybrid module (see Fig. 7).

3. 690-V Inverter "FRENIC-VG Stack Series"

3.1 Product lineup

Figure 8 shows the line-up of the 690-V inverter "FRENIC-VG Stack Series." Depending on the type of application, it is possible to select an inverter, PWM converter, filter stack or diode rectifier as a stack with an identical shape. The addition of the new SiC hybrid module equipped inverters that have single unit capacities from 355 to 450 kW has expanded the line-up of inverters in this series to support capacities from 90 to 450 kW. In order to meet the needs of further increased motor output, output capacity can be expanded by either using a high capacity multi-winding motor with split windings or by connecting stacks in parallel.

The FRENIC-VG is capable of driving a multi-winding motor with a maximum of 6 windings and supporting capacities of up to 2,700 kW. Furthermore, stacks can be connected in parallel without using a current limiting reactor, enabling it to configure a direct parallel connection system that drives high-capacity single winding motors. This direct parallel connection system, as shown in Fig. 9, is capable of driving high-capacity single winding motors of up to 1,200 kW by connecting up to 3 stacks in parallel via a motor ter-

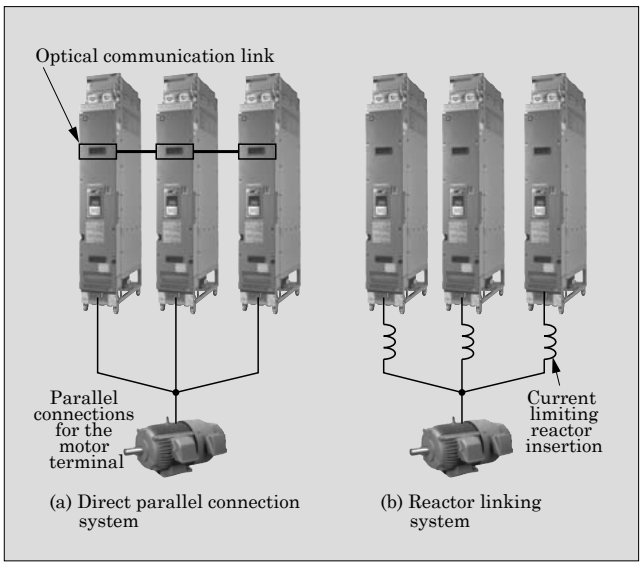

Fig.9 Stack parallel connection system

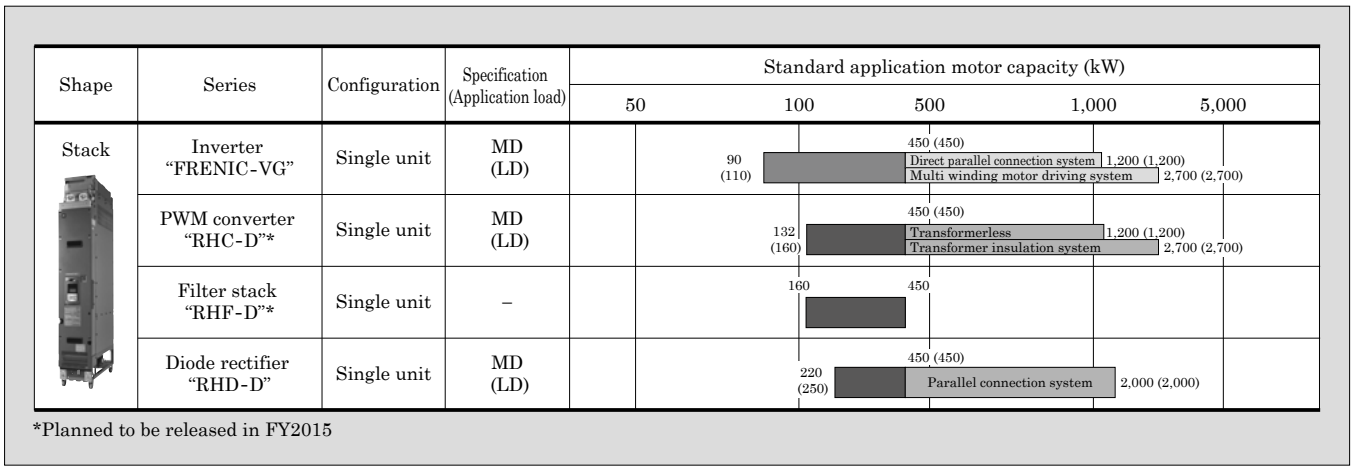

Fig.8 Line-up of 690-V inverter "FRENIC-VG Stack Series"

minal.

However, the difference between output voltages of the stacks causes an error current (cross current). Conventionally, cross current was suppressed through current limiting reactor insertion. The FRENIC-VG controls cross current by using control software without a current limiting reactor. This cross current suppression control and internal inductance of the output power lines make it possible to connect stacks in parallel.

3.2 Features of the stack-type

(1) Standardization of product width

The 690-V inverter FRENIC-VG Stack Series has a standardized stack width of 220 mm to increase ease of installation in panels, thereby achieving space saving and a total cost reduction.

In particular, stacks with capacities from 355 to 450 kW come equipped with SiC hybrid modules, as mentioned in Chapter 2, and as a result, total generated loss has been reduced by 28% compared with Si module based products. The inverter has thereby enabled the cooling component of the module to keep the volume the same as the previous products, while maintaining a stack width of 220 mm.

As shown in Fig. 10, the conventional configuration of the 690-V inverter with a capacity of 450 kW required two 250-kW stacks directly connected in parallel. In contrast, the 450-kW stack equipped with SiC hybrid modules is operates with only a single unit, thus greatly contributing to reducing the size of the panel.

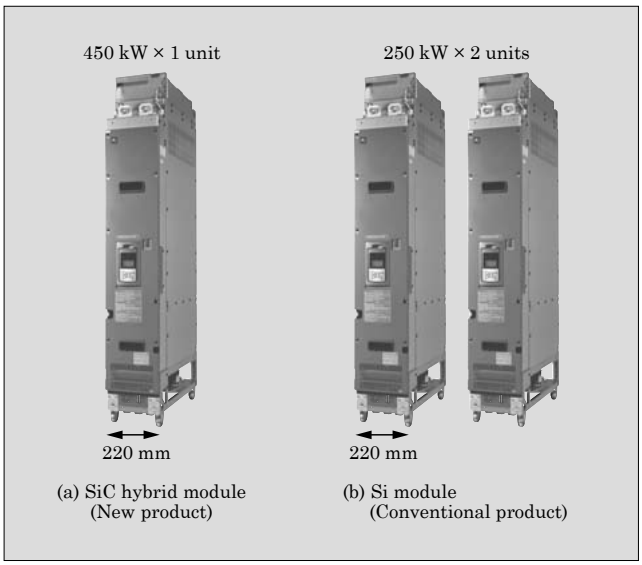

Fig.10 Space Savings based on SiC hybrid module application

(2) Selection of converter based on application needs

The stack-type differs from all-in-one unit types in that it is configured with the converter and inverter allocated to separate stacks.

By doing this, it is possible to select the converter based on application needs, as well as select the diode rectifier for applications that do not have regenerative power, or the PWM converter for applications that require regenerative power or harmonic suppression.

(3) Space savings via DC distribution

Since the inverter is made with the converter and inverter separated at a DC circuit part, a multi drive can be configured by using DC distribution system that aims to transfer energy between DC buses. This makes it easy to reduce the capacity of the converter and configure a high-capacity system, achieving space saving of the panel.

(4) Improved maintainability

The time for replacing inverters in important facilities is needed to be reduced when in trouble or equipment upgrade.

The stack-type comes with a caster drawer structure and replacement lifter greatly reduces work time compared to the conventional unit-type systems.

4. Postscript

This paper described the “FRENIC-VG Stack Series” of 690-V inverters equipped with SiC hybrid modules.

We plan to continue expanding the field of application for the 690-V inverter system by increasing the number of parallel connections in the direct parallel connection system through expansion of the control software for cross current suppression control.

References

(1) Tanaka, M. et al. “FRENIC-VG,” a High-Perfor-mance Vector-Control Inverter. FUJI ELECTRIC REVIEW. 2012, vol.58, no.4, p.154-159.

Fuji Electric's Top Runner Motor— Loss-Reduction Technology of "Premium Efficiency Motor"

TACHI, Norihiro* KOIBUCHI, Hirobumi* TAKAHASHI, Kazutoshi*

ABSTRACT

Motors are a key component indispensable for social and industrial activities. They consume electric power that accounts for nearly 40% of the global energy consumption. Consequently, improving motor efficiency is a challenge for the major countries of the world. In Japan, the Top Runner Program was introduced in April 2015 to regulate motor efficiency. The "Premium Efficiency Motor" that Fuji Electric has developed satisfies the efficiency regulation value through various loss-reduction technologies including an optimized slot shape and the adoption of magnetic steel that dissipates less power. This is an environmentally friendly product achieving low noise as well as high efficiency.

1. Introduction

Three-phase induction motors ("motors"*1) are a key component indispensable to life in society and industrial activities. They are used in large numbers as sources of power for infrastructure facilities such as air-conditioning fans/compressors, blower fans, water service pumps and elevators; and in various industrial machines including machine tools, printers and cranes. Accordingly, it is essential to improve the efficiency of motors in order to conserve energy on a global scale.

While major countries outside Japan have moved forward with efficiency regulations, in Japan, the focus has been to save energy of entire systems and there has been no regulation for motors alone. However, the amended "Act on the Rational Use of Energy" (Energy Conservation Act) was enforced in November 2013, and it stipulates the start of efficiency regulation in April 2015 as the Top Runner Program for motors.

This paper describes the loss-reduction technologies of Fuji Electric's top runner motor "Premium Efficiency Motor."

2. Amount of Power Consumption and Efficiency Classes of Motors

The global electric power consumption is 20 trillion kWh a year,approximately 40% of which is consumed by motors[1] (see Fig. 1).

In 1997, the "Kyoto Protocol"*2 for prevention of global warming was adopted, which made reduction of greenhouse gas emissions a global commitment. If motor efficiency is improved by 1%, the global power consumption can be reduced by 80 billion kWh and CO_2 emissions by 32 million tonnes.

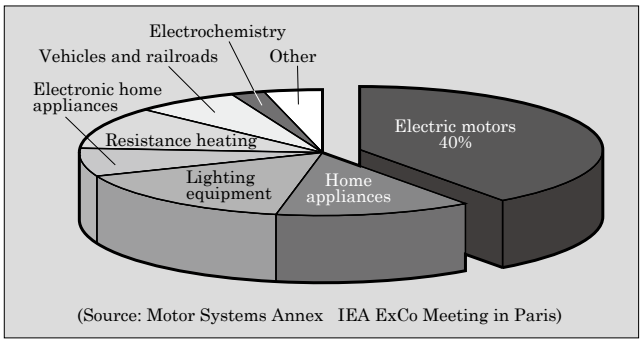

Fig.1 Breakdown of global electric power consumption

Table 1 IE code and efficiency classes

IE code	Efficiency class	JIS
IE3	Premium efficiency	JIS C 4213
IE2	High efficiency	Equivalent to JIS C 4212
IE1	Standard efficiency	Equivalent to JIS C 4210

For major energy consuming nations including Western advanced nations, improvement of motor efficiency is positioned as a very effective measure for reducing CO_2 emissions, and this has created a trend toward improving the efficiency of the motors themselves. One international standard in relation to efficiency is IEC 60034-30 [Rotating electrical machines - Part 30: Energy-efficiency classes for single-speed, 3-phase, cage-induction motors (IE code)] of the International Electrotechnical Commission (IEC) (see

* Power Electronics Business Group, Fuji Electric Co., Ltd.

*1: Motors: Although motors generally refer to all types of electric motors, 3-phase induction motor is referred in this paper.

*2: Kyoto Protocol: Officially called the "Kyoto Protocol to the United Nations Framework Convention on Climate Change."

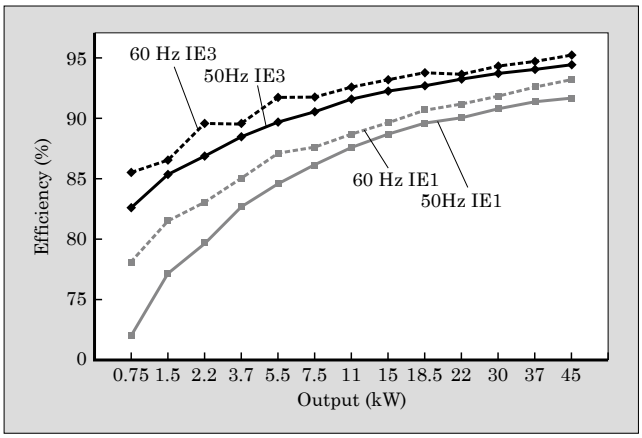

Fig.2 Efficiency comparison among Fuji Electric's representative types

Table 1). In the U.S., the total number of high efficiency (IE2) and premium efficiency (IE3) models produced and shipped accounts for approximately 70% of all motors. In Europe, IE2 accounts for over 50% and legislative regulation with IE3 started in January 2015.

As an improvement in the efficiency of motors makes progress in Europe in this way, regulation on efficiency using the Top Runner Standards is starting in April 2015 in Japan as well.

The Top Runner Standards provide regulation in view of the 3 rated voltage and frequency types, which is Japan's peculiar power supply situation, while being based on IE3. That is, while IE3 is used as the efficiency regulation values for 200 V 50 Hz and 220 V 60 Hz, IE3 value multiplied by a coefficient is used as the regulation value for 200 V 60 Hz; and the judgment of achievement of regulation values is defined by 36 categories. Figure 2 shows an efficiency comparison between IE1 and IE3 of Fuji Electric's representative types.

3. Features of "Premium Efficiency Motor"

The external appearance and specifications of the Premium Efficiency Motor are shown in Fig. 3 and Table 2 respectively. The features are:

Fig.3 "Premium Efficiency Motor"

Table 2 Specifications of "Premium Efficiency Motor"

Item		Specification
Series name		MLU (cast iron frame 100L or larger) MLK (steel frame 90L or smaller)
Protection rating		IP44 (indoor) IP55 (outdoor)
Rated voltage/ frequency		Frame number 160 L or smaller: 200/200 to 220 V and 400/400 to 440 V 50/60 Hz Frame number 180M or larger and outdoor type: 200 to 400 V 50 Hz and 200 to 400/220 to 440 V 60 Hz
Time rating		S1 (continuous)
Starting method		3.7 kW or smaller: direct-on-line starting 5.5 kW or larger: star-delta starting
Thermal class		155 (F)
Terminal box (Foot mounting)	Mounting position	Frame number 200L or smaller: left side as seen from load Frame number 225S or larger: top side as seen from load
	Port orientation	Frame number 200L or smaller: Downward (indoor) Opposite operation side (outdoor) Frame number 225S or larger: leftward as seen from load
Lead wire	System	Frame number 160L or smaller: terminal block system Frame number 180M or larger and outdoor type: lug system
	Number of wires	Output 3.7 kW or smaller: 3 (indoor), 9 (outdoor) Output 5.5 kW or larger: 6 (indoor), 12 (outdoor)
Vibration resistance		6.8 m/s^2 (0.7 G)
Color of coating		Munsell N1.2 (black matte)
Nameplate Badge Emblem	Specification nameplate	Frame number 200L or smaller: stuck on frame (steel plate) nailed on frame nameplate mounting seat (cast iron) Frame number 225S or larger: nailed on fan cover
Standard	Application	JIS C 4213
	Efficiency	JIS C 4034-30:2011*
Motor efficiency class		2P-45 kW or smaller, 4/6P-7.5 kW or smaller (except 6P-1.5 kW): IE3/IE3-IE3 at 200/200 to 220 V, 400/400 to 440 V 50/60 Hz, dual voltage 2P-55 kW or larger, 4/6P-11 kW or larger and 6P-1.5 kW: IE3/IE2-IE3 at 200/200 to 220 V, 400/400 to 440 V 50/60 Hz, dual voltage

*Motor efficiency testing is carried out according to "low uncertainty" of JIS C 4034-2-1 "Methods for determining losses and efficiency from tests of single-speed, three-phase, cage-induction motors" provision.

(1) Motor efficiency of Top Runner Standards

Motor efficiency of the Top Runner Standards is achieved in all output specifications (0.75 to 375 kW). In addition, efficiency class IE3 (premium efficiency of JIS C 4034-30:2011) is achieved at the 3 ratings[*3] and the 6 ratings[*4] of voltage and frequency.

(2) Easy replacement with standard motors

The design makes it possible to smoothly replace motors since it adopts the same frame[*5] size and

mounting dimensions as those of the conventional standard motors of Fuji Electric. The foot mounted models with a frame number of 160M or smaller have the same total lengths and diameter.

(3) Wide-ranging voltage classes

With outdoor motors, versatility has been pursued and the 6 ratings of voltage and frequency adopted in order to reduce the quantity of stock at Fuji Electric and its customers.

(4) Improved environmental endurance

The insulation performance has been improved while reducing temperature rise and the scope of adoption of cast iron frames has been expanded for improvement of corrosion resistance and noise reduction. These have made it easier to use the motors in various environmental conditions.

(a) Protection rating

The protection rating of conventional motors was IP44*6 with no distinction between indoor and outdoor models but the Premium Eefficiency Motor has been designed in conformity to the global standard to offer IP44 with the indoor model and IP55 with the outdoor model.

(b) Ambient temperature

While the ambient temperature specification was generally −20 °C to +40 °C, the range has been expanded with Fuji Electric's Premium Efficiency Motor to −30 °C to +50 °C.

(c) Maximum starting current

The reduction of resistance from that of conventional standard motors for better efficiency has caused the maximum starting efficiency to increase but the increase has been kept to approximately 20% by revising the rotor slot shape.

(5) Adaptation to inverter operation

The range of use for inverter operation has been expanded. At the base frequency of 60 Hz, constant torque operation in the range of 15 to 60 Hz was possible with conventional motors. The Premium Efficiency Motor allows constant torque operation in the range of 3 to 60 Hz. The wider range of use has improved convenience.

4. Loss-Reduction Technologies

4.1 Method of loss reduction

Figure 4 shows measures for reducing the loss of motors. Loss occurs in various parts of the motor, and in order to satisfy the efficiency regulation values, loss must be reduced everywhere it occurs. Loss can be classified into copper loss (stator copper loss and rotor copper loss), iron loss, mechanical loss and stray load loss, of which a reduction of copper loss and iron loss, accounting for approximately 50% and 30% of the total loss respectively, is particularly important.

(1) Reduction of copper loss

The stator copper loss, which is joule loss due to the electrical resistance and current in the motor windings, increases in proportion to the resistance when the current is constant. In order to reduce the resistance, revisions have been made including optimization of the number and shape of the stator slots to make the slot shape larger and increase the cross-sectional area of the conductors from those of conventional motors. As shown by equation (1), there is an inverse proportional relationship between the resistance and the conductor cross-sectional area and the resistance has been decreased by increasing the cross-sectional area of the conductors to reduce the loss.

$$R = \rho \frac{L}{S} \quad \cdots\cdots (1)$$

R : Resistance (Ω)
ρ : Electrical resistivity (Ω·m)
L : Conductor length (m)
S : Conductor cross-sectional area (m^2)

The number and shape of the slots were studied by using the finite element method to choose the optimum ones in consideration of the balance between the magnetic flux distribution of the stator and rotor and the generated loss. In addition, increasing the conductor cross-sectional area by improving the filling factor of the windings to be inserted in the slots and reducing the conductor length by making the coil end shorter reduced the resistance of the windings and thus decreasing the stator copper loss.

The rotor copper loss generated in the rotor is generated by an induced current flowing to rotor bars such as aluminum or copper. As with for the stator copper

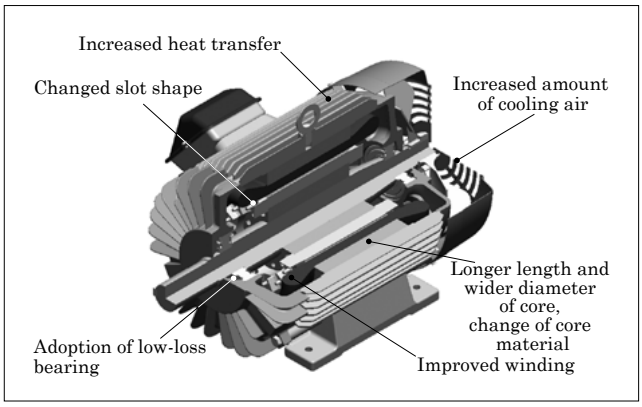

Fig.4 Measures for motor loss reduction

*3: 3 ratings: Refers to 200 V 50 Hz, 200 V 60 Hz and 220 V 60 Hz.

*4: 6 ratings: Refers to 200 V 50 Hz, 400 V 50 Hz, 200 V 60 Hz, 400 V 60 Hz, 220 V 60 Hz and 440 V 60 Hz. To achieve 6 ratings, a design in consideration of voltage and current increase based on 3 ratings is required.

*5: Frame: A series of motors often has a standardized size as a "frame" that collectively refers to 2 or 3 capacity specifications.

*6: IP: See "Supplemental explanation 4" on page 69.

loss, the slot shape has been optimized for reducing the resistance to decrease the rotor copper loss. Because the motor torque and current characteristics may greatly vary depending on the shape of the rotor slots, the shape has been optimized for each motor output and by number of poles in order to achieve the efficiency while satisfying the respective characteristics.

(2) Reduction of iron loss

Iron loss is the sum of the eddy current loss and hysteresis loss generated by the change in magnetic flux inside the iron core. In order to reduce the iron loss of the material itself, a low-loss electromagnetic steel sheet has been adopted.

Added stress on various part of the iron core strains the magnetic characteristics of the material, thus increasing the loss. Therefore, reducing the stress is also important. For example, the amount of interference between the core and the frame has been decreased in order to minimize core deformation and prevent loss from increasing. With conventional motors, the back of the core is welded in order to laminate on electromagnetic steel sheets, and this was assumed to cause an increase in the stress on the core due to welding, resulting in increased iron loss. Accordingly, the core lamination method has been changed to avoid welding and thereby prevent any increase in iron loss.

To reduce the iron loss, various parameters must be taken into account such as the number of slots of the stator and the rotor (slot combinations) and the shape and dimensions of slots. Increasing the size of slots to reduce the copper loss increases the magnetic flux density of the motor, which causes an increase in the iron loss, leading to decreased efficiency. This means that the iron loss must be reduced while considering the balance with the copper loss and the electrical characteristics, and we have used our original calculation program to decide on a rough specification and increased design accuracy by means of electromagnetic field analysis to achieve optimization.

This paragraph describes electromagnetic field analysis of the stator iron core (see Fig. 5). Figure 6 shows an example of the magnetic flux density distribution of the iron core. It represents the magnetic flux density at a certain point during rotation. Figure 7 shows an example of the iron loss density distribution of the iron core. It shows the average iron loss density observed as the voltage varies sinusoidally over one cycle.

In Fig. 6, the magnetic flux density was estimated to increase locally by increasing the size of the slots, which proved to be generally 1.4 to 1.6 T (green to yellow) and it was found that, even in the area with a high magnetic flux density, indicated by the circle in the figure, the magnetic flux density did not saturate but was about the same as that of conventional motors. Figure 7 shows that the iron loss does not increase in the area with high magnetic flux density in Fig. 6 and the slot shape was confirmed to be balanced between the copper loss and iron loss.

(3) Reduction of mechanical loss

The motor has a fan for cooling the housing and the windage loss generated by its rotation is included in the mechanical loss. Taking into account that the top runner motor features a lower loss than conventional motors and a decrease in the temperature rise resulting from heat generation, we carried out thermal design by using the thermal fluid network method in the design phase to compute the motor tempera-

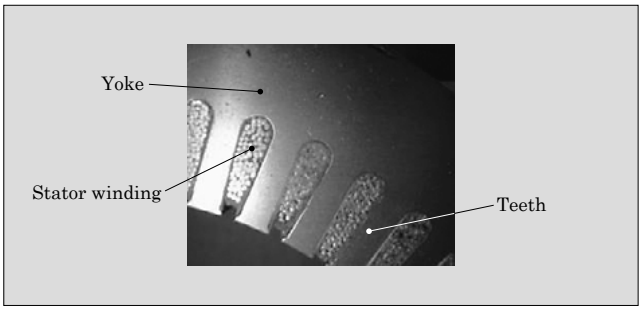

Fig.5 Cross section of stator iron core (part)

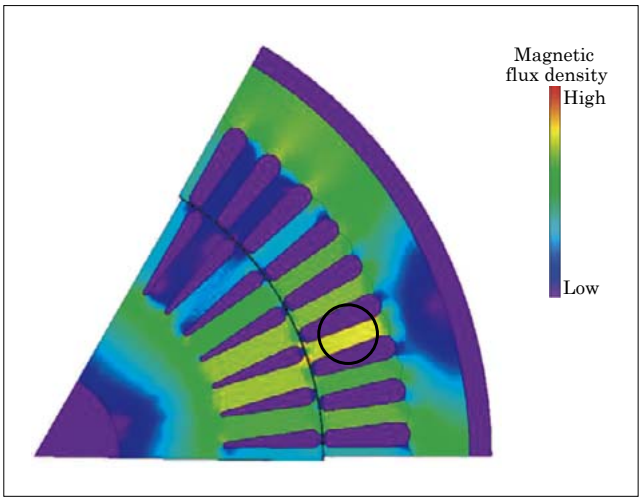

Fig.6 Example of magnetic flux density distribution of iron core

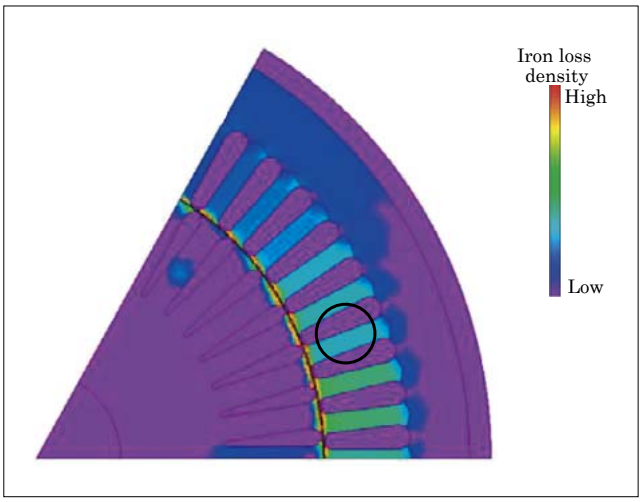

Fig.7 Example of iron loss density distribution of iron core

ture with high accuracy to minimize the windage loss caused by the cooling fan. The thermal fluid network method is a technique in which the wind speed is computed using fluid network calculations, and then the temperatures of various parts are computedusing thermal network calculations.

The loss generated in the motor bearing is also included in the mechanical loss, so we changed the bearing size and improved the grease used to further reduce the mechanical loss.

(4) Reduction of efficiency variation between products

The Top Runner Standards define 36 categories to represent the judgment on the achievement of regulation values and the efficiency value must be satisfied by the weighted average of each category. For this reason, it is also important to reduce efficiency variations between products, and this has been realized by applying strict processing accuracy and management during manufacturing.

4.2 Future issues with loss reduction

In the future, we must work on further loss reduction assuming that stricter efficiency regulation values will be enforced.

As described in Section 4.1, the loss generated in the motor can be classified into copper loss, iron loss, mechanical loss and stray load loss. These losses have trade-off relationships with each other and a significant decrease of one of them causes another to increase. Accordingly, all types of loss must be reduced while maintaining a good balance between them. To reduce loss and improve from IE1 to IE3, the loss must be reduced by 20 to 40%. In order to further reduce the loss to improve efficiency in the future, it is necessary to reduce stray load loss.

There are 2 major factors causing stray load loss:

(a) Eddy current loss generated in stator windings due to leakage magnetic flux in the stator slots

(b) Loss caused by harmonic magnetic flux in the air gaps

Stray load loss is difficult to compute with high accuracy and is generally considered as loss not included in copper loss, iron loss or mechanical loss. While the percentage of stray load loss is small enough to be negligible with types of motor having small outputs, the percentage is large with large output types, and it constitutes a factor for increased loss. In order to reduce stray load loss, the cause of loss generation must be identified and a technique allowing high-accuracy computation of the loss in the design phase must be adopted.

In addition, high-efficiency motors are inclined to have lower starting torque performance and current characteristics. With the "MLU/MLK Series," the slot shape has been optimized to achieve reduced loss and good starting characteristics at the same time, but establishing both will likely be harder as loss is decreased further. For further loss reduction, study of new low-loss core materials is necessary in conjunction with making changes to shapes and other considerations. Iron loss of the material is also increased by punching distortion generated when electromagnetic steel sheets are punched with a press, which makes it necessary to study how to eliminate the distortion.

5. Postscript

This paper has described the loss-reduction technologies of Fuji Electric's top runner motor "Premium Efficiency Motor." As efficiency regulations are enforced in major countries including Japan, Fuji Electric has been moving ahead with development in order to realize high-efficiency motors that satisfy the regulations.

In the future, motors will be required to save energy and power continuously in order to reduce greenhouse gases. We intend to keep working on development to further improve efficiency.

References

(1) Rolamd Brüniger. Motor Systems Annex IEA ExCoMeeting in Paris 14/15 April 2008.

Inverter-Integrated Motor

UTSUNO, Makoto* MATSUI, Kohei‡

ABSTRACT

Recently, energy saving by improving motor efficiency and adopting variable speed control systems have come to be accelerated. Fuji Electric has developed an inverter-integrated motor, which incorporates inverter functions into a motor. In addition to adopting a high efficient motor, variable speed operation with inverter control achieves significant energy saving effect. Moreover, it achieves downsizing by the incorporation. The energy-saving effect amounts to a reduction of 45% (1,923 kWh per year) from standard motors with IE1 class efficiency and 43% (1,742 kWh per year) compared to IE3 "Premium Efficiency Motors."

1. Introduction

As efforts for the prevention of global warming are being widely promoted, efficiency improvement of motors and energy saving of systems are being accelerated. In the field of air conditioners, the number of inverter-integrated products is increasing in order to save energy with variable-speed operation. Fuji Electric offers a wide array of motors and inverters, which can be combined to meet the needs of various systems.

In view of the increasing demand for smaller size, space saving and shorter installation work time, in addition to energy conservation, we have recently developed an inverter-integrated motor that incorporates inverter functions into a motor.

2. Demand for Energy Saving

2.1 Present condition of power consumption of motors

The total number of motors owned in Japan combining those for household and industrial use is said to be approximately 100 million. The annual amount of power consumed by these motors accounts for approximately 55% of the total power consumption in Japan. The annual amount of power consumed by industrial motors in the industrial sector alone accounts for approximately 75% of the sector's power use (see Fig. 1). The amount of power consumed by motors amounts to more than half, which has led to the demand for energy-saving motors.

2.2 Energy saving by variable-speed operation

Generally, the air volumes of fans and flow rate of pumps are adjusted by using dampers or valves. These adjustment methods, however, do not offer much reduction in the motor shaft power even if the air volumes or flow rates are reduced. To deal with the issue, applying rotating speed control with inverter can achieve significant energy saving because the power is proportional to the cube of the rotating speed. Figure 2

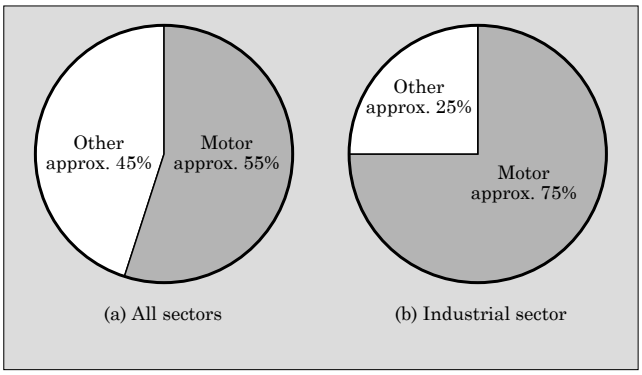

Fig.1 Percentage of motors occupied in annual power consumption in Japan

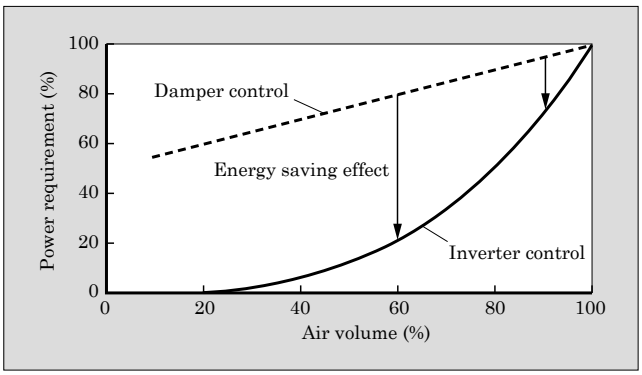

Fig.2 Relationship between air volumes and power requirements

* Power Electronics Business Group, Fuji Electric Co., Ltd.
‡ Corporate R&D Headquarters, Fuji Electric Co., Ltd.

shows the relationship between air volumes and power requirements. In inverter control, a greater energy saving effect can be obtained especially when air volumes are small. In air conditioning applications such as fans, energy can be saved by controlling the rotating speed according to the air volume required.

3. Specification and Structure of Developed Motor

3.1 Specification of developed motor

Table 1 shows the specification of the developed motor. With the rotating speed range specified between 50 and 1,000 r/min, the efficiency of the motor itself has achieved a high value of the efficiency class IE4 or more, which is referred to as the Super Premium Efficiency as defined by IEC 60034-30-1. The performance and functions of the inverter are equivalent to those of Fuji Electric's "FRENIC-Mini (C2S)." The developed motor is not only highly efficient in itself but also capable of saving a substantial amount of energy by combining variable-speed drive that uses inverter control.

3.2 Structure of developed motor

Figure 3 shows the external appearance of the developed motor. The motor frame incorporates inverter functions. Assuming applications to drive air conditioning equipment fans, it makes use of the cooling air of the fan to cool the inverter-integrated motor. To improve the cooling capability, an aluminum frame is adopted. In the frame that houses the inverter, the structure can prevent excessive resistance of the airflow while maintaining sufficient cooling areas especially in locations where a large amount of heat is expected to be generated from electronic components inside the frame. Considering the high efficiency of the motor itself at the efficiency class IE4, output and torque magnitudes and needless of the constant-output power operation range, we have designed the product as a permanent-magnet type synchronous motor using ferrite magnets. The structure also features a reduced distance from the inverter output to motor input, which offers a decrease in insulation degradation due to micro-surge voltage resulting from the wiring constant.

Table 1 Specifications of inverter-integrated motor (developed motor)

Item	Specification
Rated output power	1 kW
Rated speed	1,000 r/min
Input voltage	3 phase, 200 V series
Efficiency	84.1% or more (single motor) (Class IE4 as defined by IEC 60034-30-1)
Temperature range	−20 °C to +60 °C
Inverter performance	Equivalent to FRENIC-Mini (C2S)
Vibration resistance	1 G, 10-150-10 Hz × 20 cycles 1 octave/min, in 3 directions X-Y-Z

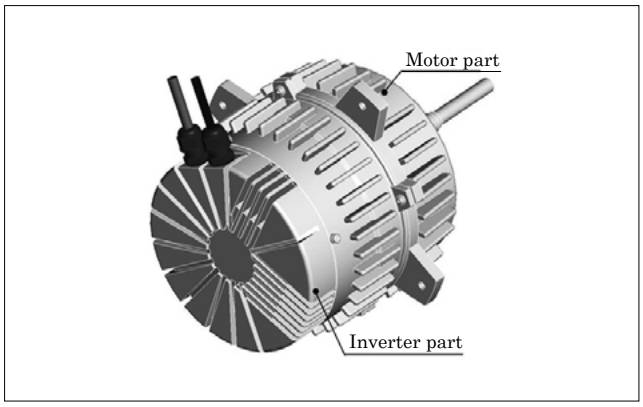

Fig.3 Inverter-integrated motor (developed motor)

4. Test Results

4.1 Efficiency measurement

Because it is difficult to conduct a torque-efficiency characteristic test with the fan mounted, the shaft of the inverter-integrated motor was connected via a coupling to the motor used as the load of a machine for taking measurement in the cold state. Figure 4 shows load characteristics on the constant rotating speed condition at 1,000 r/min. At the rated torque of 9.55 N·m, a measured efficiency of 86.3%, which is higher than the efficiency requirement of the motor itself of 84.1%, has been observed.

4.2 Temperature-rise test with actual load

Figure 5 shows the actual load test device. Some simplified wind tunnel equipment was built, and the device was mounted in it for testing. The airflows, static pressures and temperatures of various parts of the inverter-integrated motor were measured by using a flowmeter, pressure gauge and thermocouple respectively.

Figure 6 shows the measured temperature of various parts with the rated load applied and the analyzed values obtained by thermal fluid analysis. The horizon-

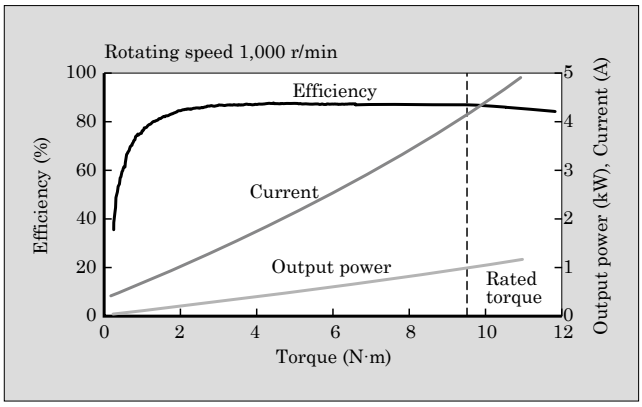

Fig.4 Load characteristics (single motor)

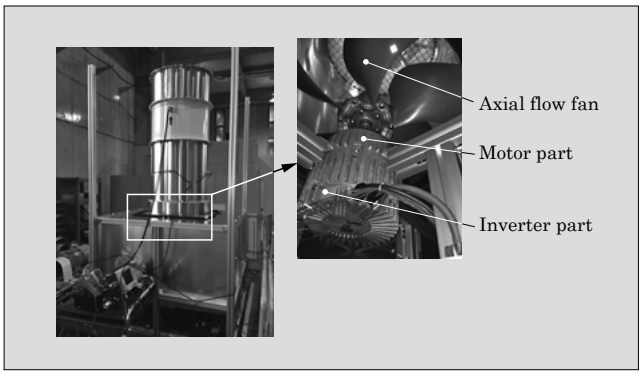

Fig.5 Actual load test device

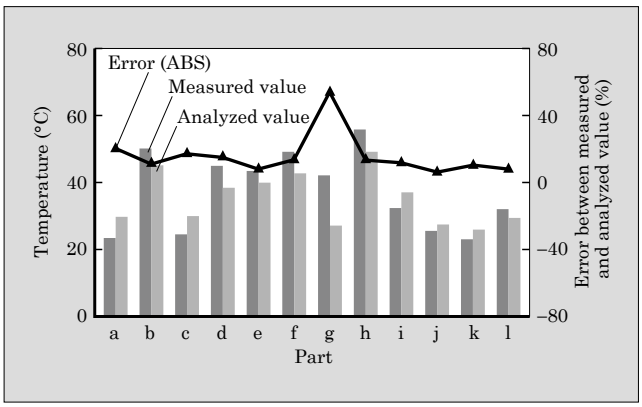

Fig.6 Measured and analyzed values of temperatures of various parts under rated load

tal axis (a to l) of the figure represents the respective parts including the inverter board. The figure indicates that:

(a) The analyzed values of the temperatures of the respective parts roughly agree with the measured values, and the temperature rise error is 17% on average.

(b) The measured temperatures of parts do not exceed the allowable values.

Parts with a large difference between the measured and analyzed value such as part g, are considered to be under the influence of heat generation from other parts located in the vicinity. In addition, study items for improving the analysis accuracy have been identified such as a reduction in the cooling capacity caused by separation of the cooling air flowing in the frame of the inverter-integrated motor.

4.3 Vibration test

Outdoor units for air conditioning such as gas heat pumps incorporate a compressor and engine inside the equipment. Vibration of these devices causes a vibration to be applied to the motor integrated in the same equipment. Accordingly, we conducted a vibration test under Table 1 and verified after the test that there was no damage to various parts of the inverter-integrated motor.

For measuring the natural frequency (resonance frequency) of the respective parts of the inverter, we conducted an impact test on the inverter board alone and also modal analysis of the board itself by using an analysis tool called ANSYS Workbench*1, and the results were compared with the actual measurements. Figure 7 shows the measured and analyzed values of the natural frequency of the inverter board. The horizontal axis (A to I) represents the respective parts including the inverter board. The error between the measured and analyzed values is not exceeding 5%, showing good accuracy. It has been revealed, however, that some parts have a natural frequency between 10 and 150 Hz, which is the vibration resistance frequency range of the development specification. This frequency range is the frequency band of vibration from the engine and compressor in the air conditioning equipment. We noticed that those parts required specific consideration at a vibration test so that a defect isn't caused on the use.

Figure 8 shows how the vibration test was carried out. In the test, the jig for securing the inverter-integrated motor has been proven to show a natural frequency value of 200 Hz or higher in the natural value analysis, and the jig has been confirmed to have no influence.

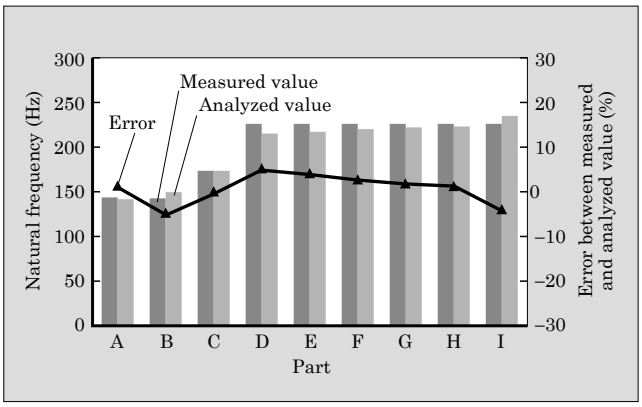

Fig.7 Measured and analyzed values of natural frequency of inverter board

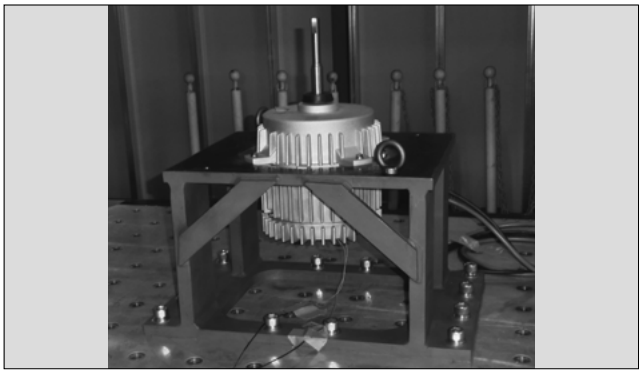

Fig.8 Vibration test

*1: ANSYS Workbench: trademark or registered trademark of ANSYS Inc. and its subsidiaries

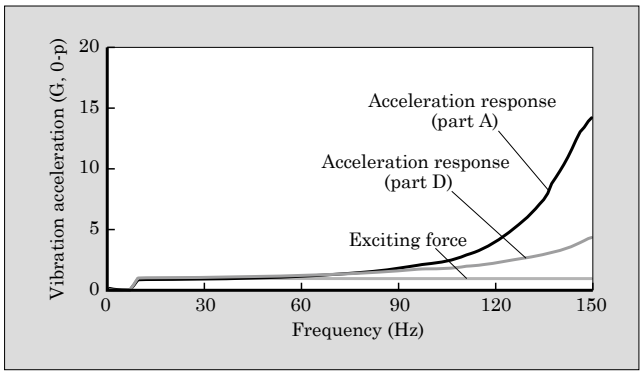

Fig.9 Example of vibration acceleration frequency characteristics of parts A and D (in the Y-axis direction)

Figure 9 shows an example of vibration acceleration frequency characteristics of parts A and D (in the Y-axis direction). No resonance was observed at 150 Hz or lower and the development specification was satisfied. The inverter-integrated motor was disassembled after the vibration test, and the motor, including its parts, has been confirmed to have no failure.

5. Energy-Saving Effect and Downsizing

5.1 Energy-saving effect

This section presents verification of the inverter-integrated motor in terms of energy-saving effect by comparing it with a standard motor (efficiency class IE1) and the top-runner motor "Premium Efficiency Motor" (IE3) that conforms to the efficiency regulation starting in April 2015. Figure 10 shows an example of the energy-saving effect. It shows a comparison of the annual power consumption and energy charge of the respective types.

The power consumption and energy charge have been calculated based on the following conditions.

(1) Types
- ○ Standard motor: MLC1107B, 1.5 kW, 6-pole
- ○ Premium efficiency motor: MLU1107B, 1.5 kW, 6-pole
- ○ Inverter-integrated motor: 1.5 kW, 1,000 r/min

(2) Conditions
- ○ Run for 10 hours/day, operated 250 days/year at 80% air volume
- ○ Energy charge unit price 16 yen/kWh [unit price used for calculating energy-saving effect of top-runner motors by the Japan Electrical Manufacturers' Association (JEMA)]
- ○ Standard motor and premium efficiency motor: damper control Inverter-integrated motor: inverter control (calculated using the relationship between air volumes and power requirements shown in Fig. 2)

Based on Fig. 10, the energy-saving effect of the inverter-integrated motor is a 45% decrease (1,923 kWh/year) from that of the standard motor and a 43% decrease (1,742 kWh/year) from that of the premium efficiency motor. Regarding energy charges, the reducing effect obtained is 30,772 yen/year from the standard motor and 27,872 yen/year from the premium efficiency motor.

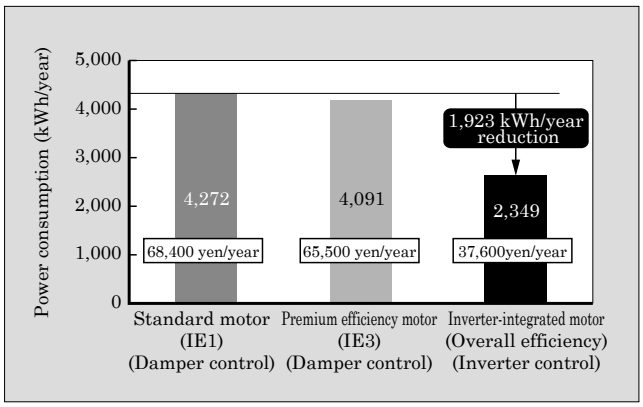

Fig.10 Example of energy-saving effect

5.2 Downsizing

Figure 11 shows the dimensions of the standard motor, general-purpose inverter and inverter-integrated motor, and Table 2 shows a comparison in terms of volume and mass. The inverter-integrated motor and standard motor have equivalent torques. As compared with the standard motor, the inverter-integrated motor has achieved a volume reduction of 7% and a mass reduction of 24%. In the comparison with a variable-

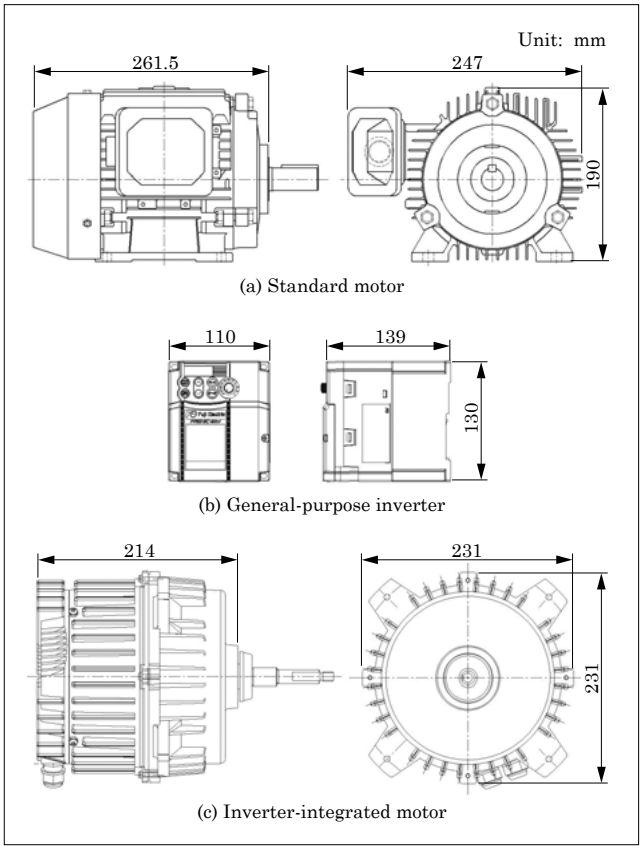

Fig.11 Dimensions of each model

Table 2 Volume and mass comparison

Type	Volume and mass
Standard motor MLC1097B 1.5 kW, 4 poles	Volume: 12.27×10^6 mm^3 Mass: 16.5 kg
General-purpose inverter FRN1.5C2S-2J	Volume: 1.99×10^6 mm^3 Mass: 1.7 kg
Inverter-integrated motor	Volume: 11.42×10^6 mm^3 (Comparison with single standard motor: −7% Comparison with standard motor and general-purpose inverter: −20%) Mass: 12.5 kg (Comparison with single standard motor: −24% Comparison with standard motor and general-purpose inverter: −31%)

speed drive system that combines the standard motor and general-purpose inverter, the volume has been reduced by 20% and mass by 31%.

In addition to the evaluation of the efficiency characteristics, temperature and vibration resistance of the inverter-integrated motor described above, we have conducted drive evaluation of the inverter board itself and comparison with a general-purpose inverter to successfully verify its equivalent performance in terms of the drive performance and harmonic current level.

6. Postscript

This paper has described an inverter-integrated motor that incorporates inverter functions in a motor. In the future, we intend to work on the development to improve the efficiency, energy-saving and downsizing and lightening using the inverter/drive and rotating machine technology to help prevent global warming.

Technologies to Reduce Size and Weight of Power Electronics Equipment for Rolling Stock

TAKIZAWA, Masamitsu* NISHIJIMA, Tomotaka*

ABSTRACT

Recently, there have been strong demands for power electronics equipment mounted on devices and units to be installed in rolling stock to have a smaller size, less weight and also to save energy. Fuji Electric has been meeting these demands by improving its cooling and equipment mounting technologies. For isolation transformers, which had limitations in terms of their downsizing, we have adopted a medium-frequency isolation circuit technology and direct current power supply system and implemented an optimized design to reduce the ratio of their installation space to the unit volume, thereby realizing further size and weight reduction. We offer in Japan and overseas power electronics equipment that uses the latest technologies such as propulsion systems and auxiliary power supplies for rolling stock including the Shinkansen.

1. Introduction

In recent years, the power electronics equipment mounted to devices and units installed for improving passenger services and vehicle functions of electrical rolling stock have been required to be not only energy efficient, but also more compact and lightweight. In order to meet these demands, Fuji Electric has enhanced its cooling technology and equipment mounting technology, while also adopting and optimizing the design of medium-frequency isolation circuit technology. In this paper, we describe the size and weight reducing technologies of our power electronics equipment by providing application examples, which include the traction converter for Shinkansen trains (bullet trains) operated by Central Japan Railway Company (JR Central) and the auxiliary power supply for rolling stock operated by Hokkaido Railway Company (JR Hokkaido).

2. Power Electronics Equipment for Electrical Rolling Stock

Power electronics equipment for electrical rolling stock (see Fig. 1) are required to meet a diversity of demands ranging from social requirements which include energy conservation and harmonization with the environment to railroad company requirements which include a reduced cost, higher output, compactness, lightweigh, easier maintainability, lower noise and improved control performance, while also having the safety and reliability features required of public transportation.

Fuji Electric has been working on the development of next-generation technology for its electrical rolling stock propulsion system (drive system including the traction motor, control unit, traction converter and traction transformer), auxiliary power supply and electrical driven doors (side sliding door closing device). In particular, our propulsion system for Shinkansen trains has been continuously adopted starting with the first Series Zero Shinkansen train up to the latest N700A Shinkansen train, so we have a history of providing the propulsion system for the Shinkansen train all throughout its successive generations. The system is reliable and safe, and it has gained a high reputation in Japan as a product with a proven track record. Furthermore, we have also been providing propulsion systems and auxiliary power supplies for conventional railroad lines in both the Japanese and overseas markets since the 1950s.

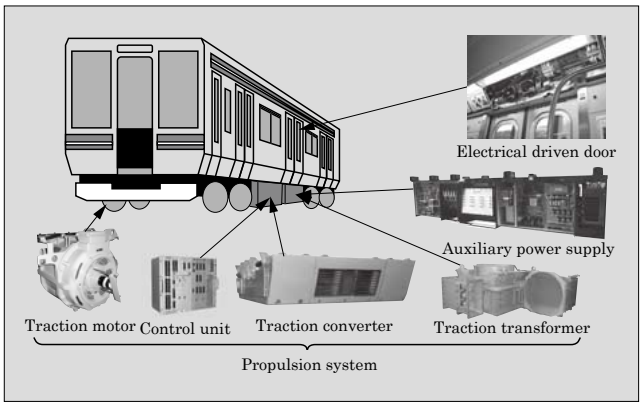

Fig.1 Power electronics equipment for electrical rolling stock

3. Size and Weight Reducing Technology

In this section, we will describe the downsizing and weight reducing technologies of our propulsion systems and auxiliary power supplies for electrical rolling

* Power Electronics Business Group, Fuji Electric Co., Ltd.

stock.

3.1 Improved cooling performance for the traction converter of Shinkansen trains

We will give a brief description of the cooling technology and equipment mounting technology adopted for the traction converter of the latest N700A Shinkansen train (see Fig. 2) operated by JR Central.

The traction converter, as shown in Fig. 3 is configured with a 3-level pulse width modulation (PWM) converter and 3-level variable voltage variable frequency (VVVF) inverter. The system is driven by combining 4 traction motors connected in parallel with the single VVVF inverter. It is designed to have enhanced efficiency and a reduced weight by adopting a low-loss snubber-less system mounted to a high blocking voltage, large-capacity, low-loss insulated gate bipolar transistor (IGBT) module (3,300 V, 1,200 A).

Fig.2 N700A Shinkansen train (photo courtesy of Central Japan Railway Company)

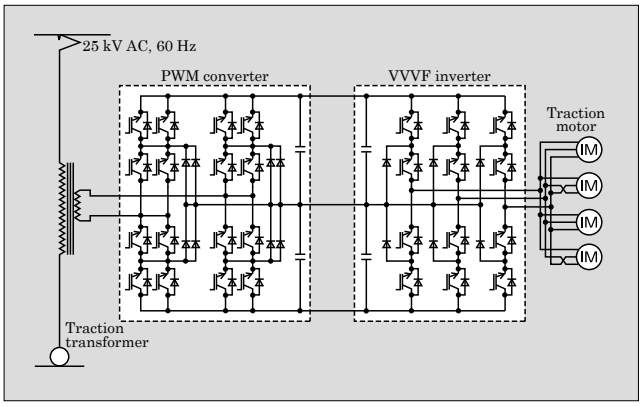

Fig.3 Configuration of traction converter for N700A Shinkansen trains

A comparison of traction converters for Shinkansen trains is shown in Table 1. The TCI3 model traction converter, which started being utilized in the Series N700 Shinkansen trains in 2007, has an optimized structure and has eliminated the need for a snubber circuit, and these enhancements have helped it realize a reduced mass of 43% and reduced unit volume of 22% compared with the TCI1 model traction converter used in the Series 300 Shinkansen trains. The cooling system is based on the same exact system used in the Series 300 and the Series 700 Shinkansen trains, combining forced air cooling by means of a blower and boiling cooling through use of a coolant.

The TCI100 model traction converter, which started being utilized in the Series N700 Shinkansen trains in 2008, makes use of a blower-less and coolant-less cooling system based on a simple aluminum cooling fin and traveling wind self-cooling system that actively utilizes wind as cooling air by means of the moving train. This has allowed the TCI100 model to have the exact same external dimensions as the TCI3 model traction converter, while reducing its mass by 12% (50% less compared with the Series 300). The blower-less system also reduces noise in the passenger compartment, while improving comfortability.

The TCI101 model traction converter, which started being utilized in the N700A Shinkansen trains in 2013, inherits the same exact blower-less cooling system adopted by the TCI100 model traction converter, while achieving a reduced unit volume of 25% (42% less compared with the Series 300) and a reduced mass of 17% (59% less compared with the Series 300). We were able to achieve the size and weight reductions by studying, in collaboration with our customers, the auxiliary circuit systems such as the charging circuit, as well as by reviewing the specifications of electronic components and changing the material of the aluminum cooling fin.

In the future, we plan to continue proposing and developing products that further reduce the size and weight of traction converters used in the N700A Shinkansen trains.

Table 1 Traction converter for Shinkansen trains

Shinkansen trains	Series 300	Series 700	Series N700	Series N700	N700 A
Traction converter	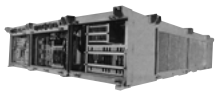 TCI1 model	TCI2 A model	TCI3 model	TCI100 model	TCI101 model
Volume ratio (%)	100	82	78	78	58
Mass ratio (%)	100	74	57	50	41

3.2 Adoption and optimization of design of medium-frequency isolation circuit technology

(1) Challenges facing commercial frequency isolation systems (conventional systems)

The auxiliary power supply converts voltage from the overhead line (600 to 825 V) to a voltage that can be used by general devices and equipment. In order to ensure safety, the overhead line side and the load side need to be isolated. Up until now, isolation was generally performed by a transformer after the inverter makes conversion into an AC voltage of a commercial frequency (see Fig. 4).

However, advances in technology have enabled continued downsizing of power units and control units, but downsizing for commercial frequency transformers has reached its limits along the way.

Figure 5 shows the external appearance of an auxiliary power supply used by the Washington Metropolitan Area Transit Authority. This unit has achieved a smaller size than previous products of the same functionality by improving the arrangement of components, but this has also led to increased transformer occupancy (see Fig. 6).

(2) Application of medium-frequency isolation system and DC power feeding system

The following technology has been developed to reduce transformer occupancy, while further decreasing the size of the auxiliary power supply.

(a) Medium-frequency isolation circuit technology (approx. 10 kHz)

(b) DC power feeding system

Auxiliary power supplies developed for Hokkaido Railway Company are devices that take advantage of these size and weight reducing technologies (see Fig. 7).

As shown in Fig. 8, this unit adopts the medium-

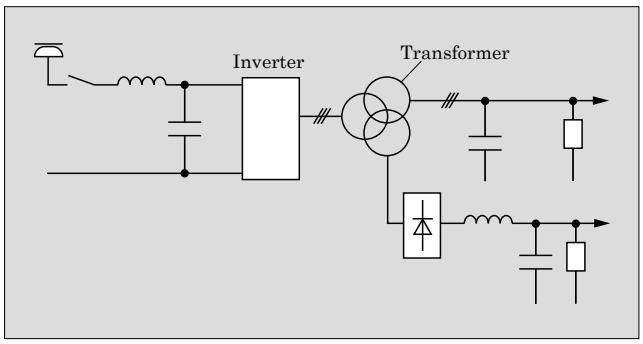

Fig.4 Configuration of general auxiliary power supplies

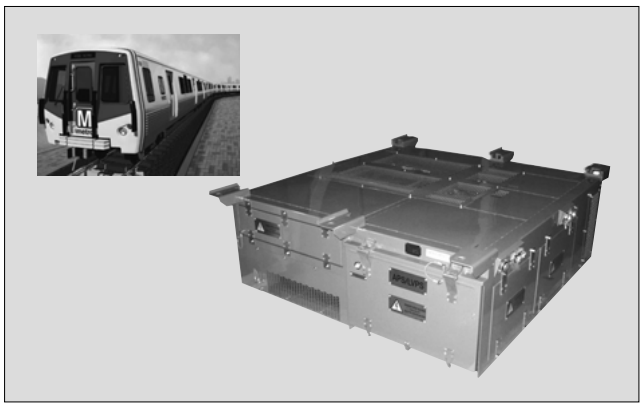

Fig.5 Auxiliary power supply used by Washington Metropolitan Area Transit Authority

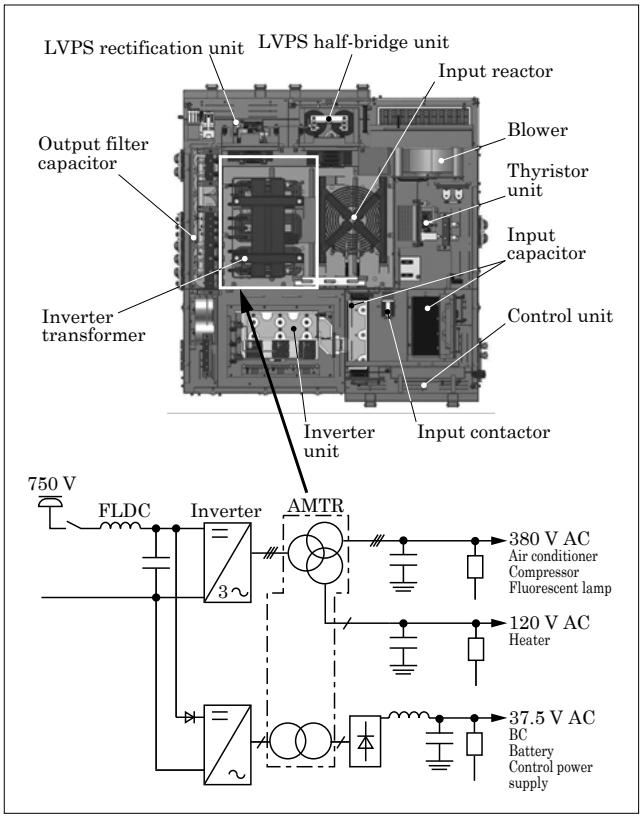

Fig.6 Configuration of auxiliary power supply used by Washington Metropolitan Area Transit Authority

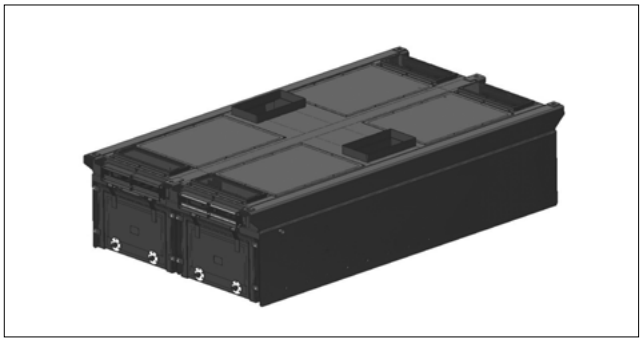

Fig.7 Auxiliary power supply for Hokkaido Railway Company

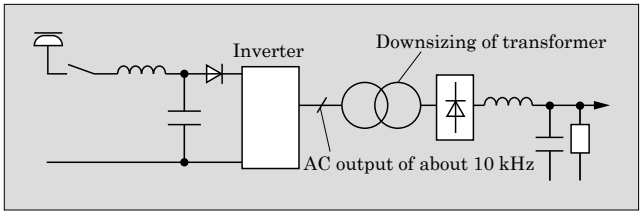

Fig.8 Medium-frequency isolation circuit system

frequency isolation circuit system that is designed so that the inverter converts DC to a medium-frequency AC, and after isolation is made by the medium-frequency transformer, rectification is implemented by means of a diode bridge. Higher-frequency enhancements have enabled the transformer to achieve a reduced size by reducing the size of the core via a lower magnetic flux density as well as by decreasing the number of coil windings, while also making it possible for the inverter to attain a reduced size by applying a resonance circuit. By doing this, significant size and weight reductions have been achieved (75% reduction compared with previous products), and as a result, transformer occupancy has been decreased to 5%.

Furthermore, power has generally been supplied by an AC voltage of a commercial frequency for load devices such as the inverter air conditioner, which becomes a load for the auxiliary power supply, but we have worked in partnership with Hokkaido Railway Company, and as a result, we have been able to change the specifications of the load devices and are now utilizing a DC power feeding system (see Fig. 9). This has resulted in a reduction of not only AC output circuits (inverter circuits) for the auxiliary power supply, but also rectification circuits for the load devices, and this enhancement has contributed to reducing the size of the auxiliary power supply and the overall weight of the train.

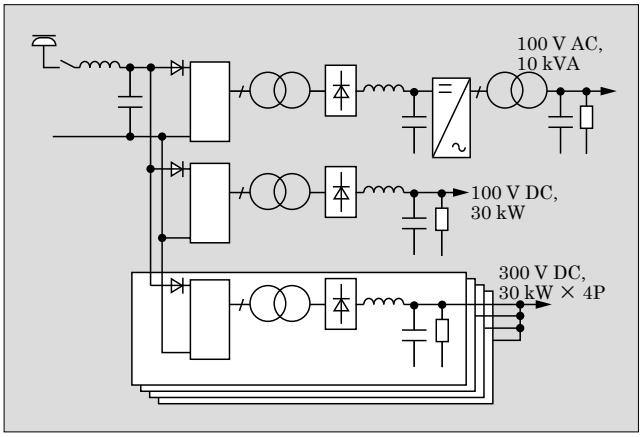

Fig.9 Configuration of medium-frequency auxiliary power supply in DC power feeding system

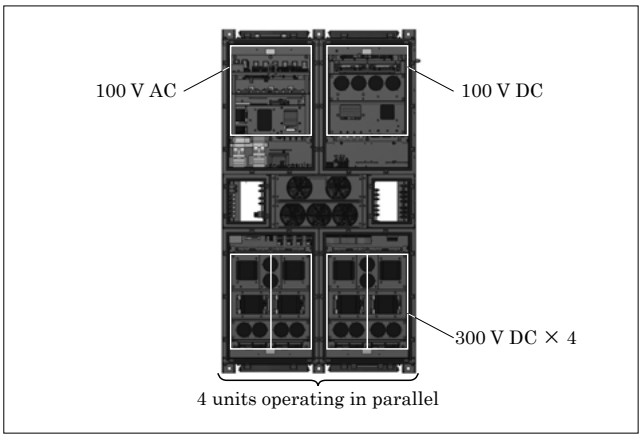

Fig.10 Medium-frequency auxiliary power supply

The medium-frequency isolation circuit can be applied to relatively small-capacity devices. Therefore, by connecting in parallel 4 optimally designed compact devices with a capacity of 30 kW, this unit can achieve the features of a high-capacity device, while being smaller and lighter than conventional units (see Fig. 10). Auxiliary power supplies need to be compatible with the various output specifications required of the power feeding systems of electrical rolling stock, but this unit makes it possible by simply changing the number of parallel connections.

4. Postscript

This paper described the size and weight reducing technologies used in power electronics equipment for electrical rolling stock. These fields are based on the most advanced power electronics technology, and in addition to features such as being small, lightweight, high performance, highly functional, maintenance friendly and comfort enhancing, they are also becoming increasingly important in response to social themes such as contributing to the conservation of the global environment.

We will continue actively pursuing research and development in anticipation of social and market needs such as energy conservation and environmental protection, while offering products that contribute to reducing the overall environmental burden of society.

Latest Trend and Safety and Reliability Technology of Rolling Stock Doors

UMEZAWA, Kotaro* TERASAKI, Tomio* INATAMA, Shigeki*

ABSTRACT

Fuji Electric has developed and commercialized a door operating equipment (linear motor system and FCPM system) with a simplified mechanism by applying the motion direction of a motor to the linear motion of the side sliding door. The door operating equipment for the side sliding door of rolling stock is an important component that ensures the safety of passengers when they are boarding, alighting and traveling, and it may affect trains' punctuality. Consequently, the system is required to be safe, reliable, high functional, and maintenance saving. These characteristics have been achieved in a safety evaluation that was conducted at the design stage and that included failure mode effect analysis and hazard analysis, and they have also been ensured with control technologies such as triple feedback, external force suppression and push-back control.

1. Introduction

Doors for electrical rolling stock are pieces of equipment that are in direct contact with passengers with each door operating on its own independent system, and since rolling stock are often equipped with a large number of doors, they are required to have a high level of safety, reliability and functionality, while also being maintenance friendly. Fuji Electric started supplying its electrical driven doors in 1999. As of the end of 2014, our doors are being utilized in over 30,000 different door locations in Japan and overseas.

This paper describes the latest trends and safety and reliability technology of rolling stock doors.

2. Electrical Driven Door System and Components

2.1 Features of electrical driven doors

In Japan, pneumatic operating door systems have been widely adopted, but in recent years, electrical driven door systems have been quickly gaining popularity. In contrast to this, electrical driven door systems have been popular for many years overseas[(1)].

Compared to pneumatic operating doors, electrical driven doors have the benefit of not requiring air piping while also eliminating disturbances due to equipment aging. Electrical control systems are characterized as enabling the reproduction of fixed open-close patterns and open-close times, and this can contribute to reducing the initial cost and maintenance cost for the rolling stock system. Furthermore, the electrical driven system creates flexibility in the functions of the controller and enhances safety in the event that passengers or luggage are pinched by the doors. It also makes use of data transmission technology to enable streamlined pre-operation checks and greater intelligence while providing robust self-diagnosis functions for the door unit.

Fuji Electric's electrical driven doors utilize power electronics technology and control technology, and employ a system for driving side sliding doors in the same drive direction as the motor. As a result, they have simplified the door drive mechanism and enhanced safety and reliability through improved detection of obstruction.

2.2 Linear motor door operating equipment

Fuji Electric has developed and is supplying the market with linear motor door operating equipment that makes it possible to operate the side sliding doors in the same direction as the motor. By operating the doors in the same direction as the motor movement, it is possible to eliminate the use of superfluous motion converting mechanisms. This enhancement ensures safety in the case that passengers or luggage are pinched by the doors by enabling quick detection of the danger. The linear motor adopts a permanent magnet linear synchronous motor that allocates the permanent magnet to the stator and the coil to the mover. The configuration of the linear motor (cross-section view) is shown in Fig. 1.

There are 2 types of operating systems for applications utilizing double side sliding doors. One is a system for separating the doors via 2 motors, and the other is a system that uses a mechanism for connecting and operating the left and right doors via a single motor. Determining which system to adopt depends on the safety and budget requirements of the railway operator. Fuji Electric is providing products that meet the needs of both requirements.

When operating the doors with 2 linear motors,

* Power Electronics Business Group, Fuji Electric Co., Ltd.

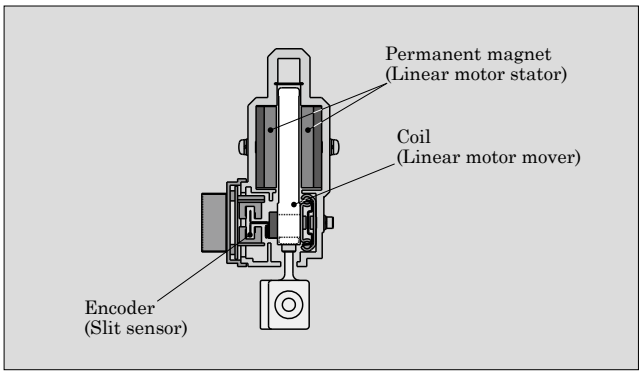

Fig.1 Configuration of linear motor (cross-section view)

a simple configuration is employed for directly opening and closing the doors via the movements of both linear motors. A configuration in which the left and right doors are opened and closed via 2 linear motors is shown in Fig. 2. This system is utilized by New York City Transit R160 trains (NYCT-R160 trains) in about 5,800 door locations (see Fig. 3).

When operating the left and right doors with a single motor, a rack and pinion are used for the interlocking mechanism to enable door operation. A configuration in which the left and right doors are opened and closed via a single linear motor is shown in Fig. 4. This system is utilized in Japan and overseas, including Series E233 trains operated by East Japan Railway Company (JR-East), at more than 20,000 door locations (see Fig. 5).

2.3 FCPM system based door operating equipment

The Flat Cup Permanent Magnet Motor (FCPM) system operates side sliding doors by rotating the pinion of the rack-and-pinion mechanism by means of the FCPM of the rotary motor. A system in which the left and right doors are opened and closed via a single rotary motor is shown in Fig. 6. The left and right doors are opened and closed by operating the upper rack and lower rack by means of rotating the pinion directly connected to the motor shaft. It is a flat-shaped FCPM since the motor needs to be stored in the narrow space inside the lintel. This FCPM system has achieved further weight reductions, while also possessing the same characteristics as a linear motor capable of using the directional motion of the motor to accommodate the movement of the side sliding doors. This system has been employed in a dozen rolling stock projects in both

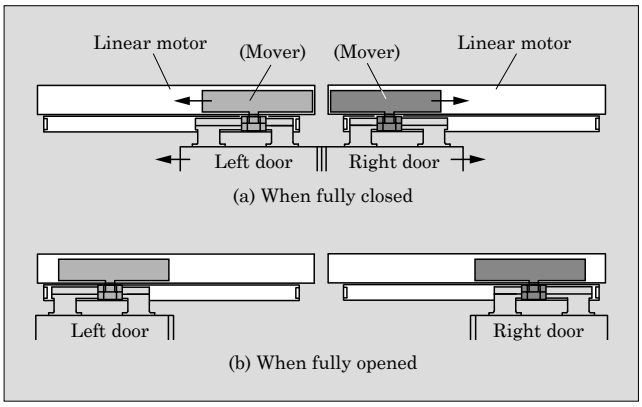

Fig.2 Configuration of linear motor (2 motors) door operating equipment

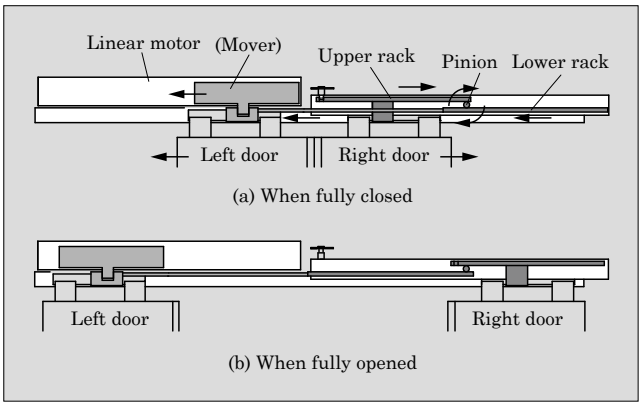

Fig.4 Configuration of linear motor (1 motor) door operating equipment

Fig.3 NYCT-R160 train and linear motor door operating equipment

Fig.5 JR East Series E233 train and linear motor door operating equipment

the Japanese and overseas markets, and has started being utilized in transit systems such as Yurikamome (see Fig. 7).

(1) Motor (FCPM)

The motor for the door is required to meet several conflicting requirements. For example, it needs to have a powerful closing force during rush hour, but a safe and gentle door closing force in the case of pinching, the opening and closing time and full opening stopping position must be completely identical with no variation, and size reductions are needed to meet the size limitations of the lintel, while also ensuring easy maintenance for long-term use. Based on these needs, we developed the FCPM for the dedicated door motor so that it is characterized as having a thin profile, low speed and high torque, as well as high-precision positioning detection. In order to implement the control technology described in Chapter 3, it integrates a high-precision optical encoder, and achieves a 0.01 mm position resolution and 750 μs thrust response from 0 to 100%, as well as a door pressure of 500 N during stand still.

(2) Power transmission mechanism

Biparting doors are operated via a single motor by means of a power reversal mechanism (direction changing device) consisting of an upper rack, lower rack and pinion mounted to the motor shaft end (see Fig. 4, Fig. 6).

This FCPM system-based door operating equipment consists of a rack-and-pinion mechanism and improves sensibility of obstruction for direct signaling to door opening and closing movements without the deceleration that is common in ball screw type systems. Furthermore, it has a simple structure that is less susceptible to failure, and it is highly reliable requiring almost no maintenance.

One of the rolling stock operated in the North American market has restricted space between the connecting doors of the train cars, and installation was not possible without reducing the length of the direction changing device. For this reason, we developed an opening and closing system achieving a reduced length by utilizing multiple racks, which have a length of about half the width of the fully opened/closed doors, and by engaging the racks with the pinions (see Fig. 8).

When the doors open and close, a force is applied to the relay rack, which is able to move horizontally, from the power supply pinion of the motor shaft. After this, the relay pinion, which is attached at the tip of the movable relay rack, rotates through engagement with the fixed rack which is mounted to the case. The

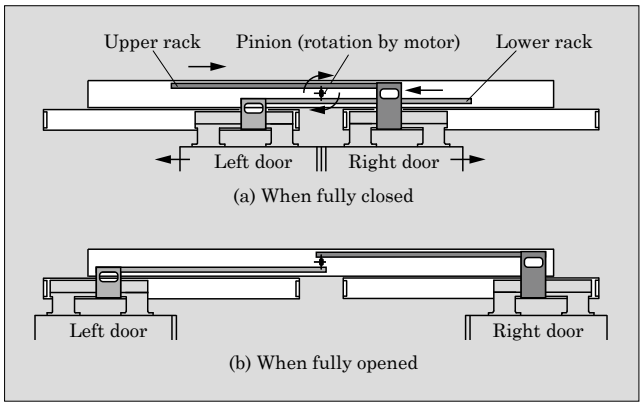

Fig.6 Configuration of FCPM system based door operating equipment

Fig.7 Yurikamome rolling stock and FCPM system based door operating equipment

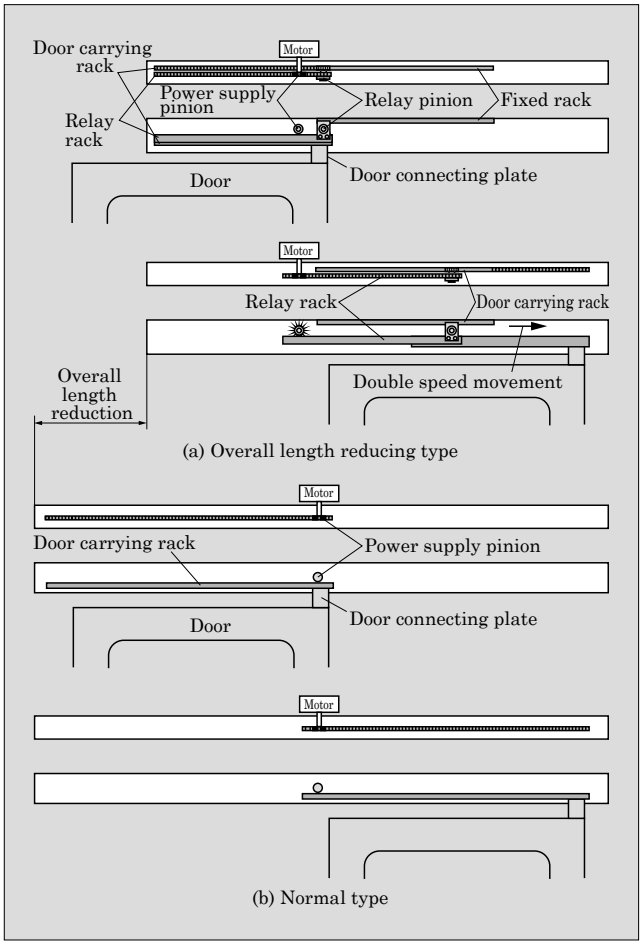

Fig.8 Direction changing device

relay pinion, which moves in the advancing direction and rotates in the advancing direction, moves the horizontally movable door carrying rack to open and close the doors.

By making the length of the relay rack, fixed rack and door carrying rack each approximately half the width of the door opening, the total length of the door opening and closing system has been reduced to about three-quarters of the size of conventional systems.

2.4 Locking and unlocking unit

The locking unit ensures that the door is in the closed position, and it is one of the most important components for ensuring the safety of the door. Fuji Electric has employed a mechanism that utilizes a lock pin for the locking unit. The unit also incorporates a mechanism for releasing the locked state when the doors move to open. The mechanism offers two systems: the self-unlocking system via the thrust in the door opening direction generated by the motor (see Fig. 9) and the solenoid unlocking system via a solenoid whose power supply is not shared with the motor (see Fig. 10). Both systems allow for manual door unlocking during times of emergency when there is no control power.

Furthermore, some customers require that the locking and unlocking mechanism be independent from the door opening and closing system, which is different from conventional systems that linked the locking and movement mechanism with door opening and closing movements. In order to meet these needs, we have developed a mechanism for locking and unlocking that is independent of the door opening and closing system (see Fig. 11).

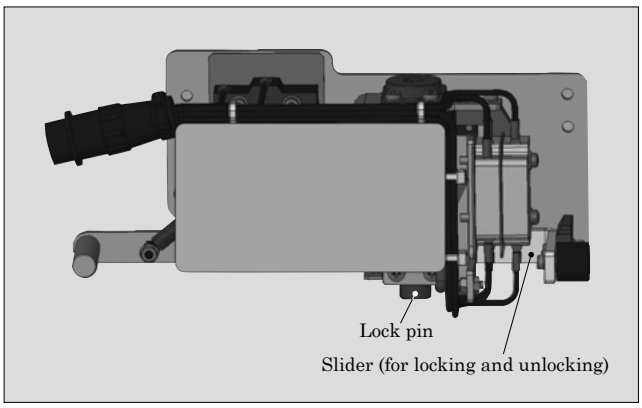

Fig.9 Locking and unlocking unit (self unlocking type)

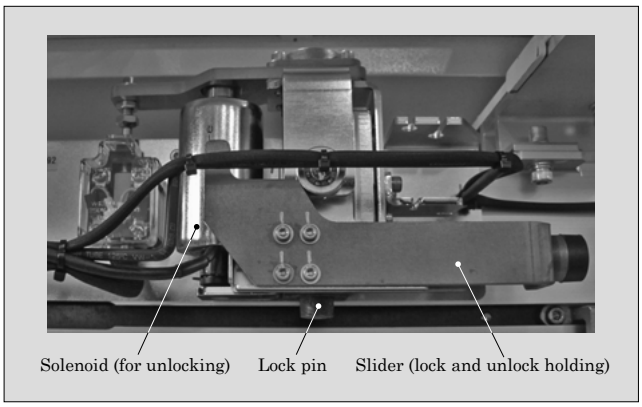

Fig.10 Locking and unlocking unit (solenoid unlocking type)

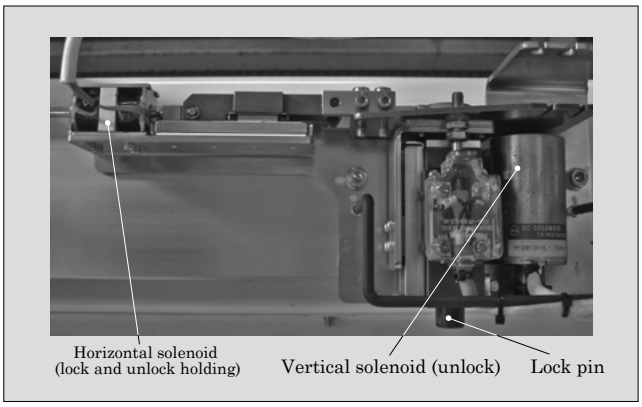

Fig.11 Locking and unlocking unit (door opening/closing and locking/unlocking independent type)

2.5 Emergency unlocking and isolation unit

It is also required that, in addition to the opening and closing function itself, there be a function allowing for forced manual unlocking and releasing of the doors during times of emergency when there is no control power, as well as function for temporarily isolating specified faulty doors, while still enabling the rolling stock to operate normally.

The emergency door unlocking unit, as shown in Fig. 12, has conventionally taken the form of a handle, which is installed on both the inside and outside. The locking and unlocking unit mounted to the door operating equipment is mechanically connected by means of a metal wire, and unlocking can be done by operating the handle. Some specified units, depending on a specification, are operated by crew members with keys instead of a handle. Furthermore, there are also other various requirements such as allowing passengers access to the unlocking mechanism, but only allowing crew members to restore the unit to its default state

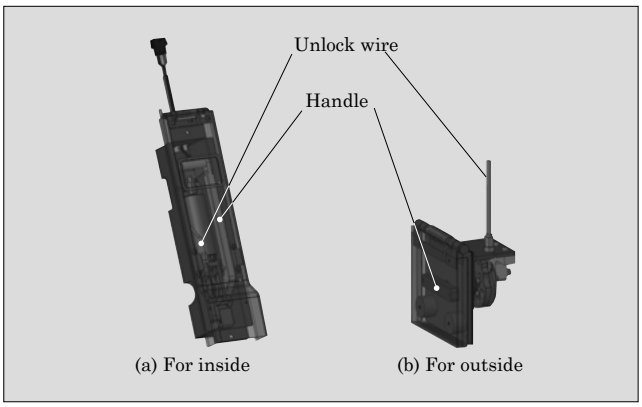

Fig.12 Emergency door unlocking unit

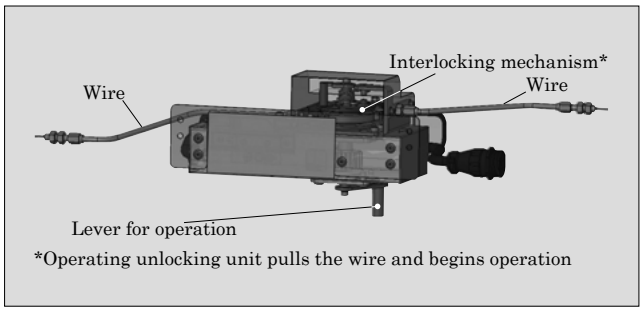

Fig.13 Isolation unit (with interlocking mechanism)

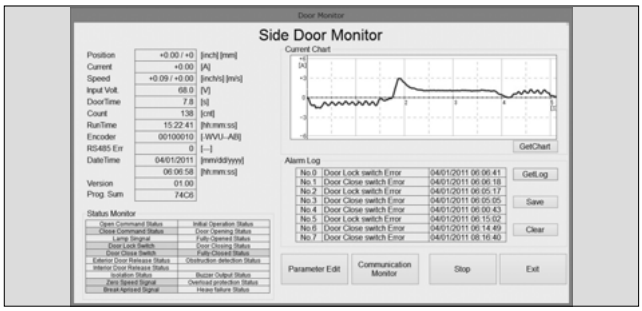

Fig.14 PTU screen example

using a dedicated key. Also, specifications related to the operating force of the handle differ according to customer requirements. When designing the unit, it is necessary to consider the laying route (length, number of bends, etc.) of the frame of the release wire, while also calculating the operation force needed to satisfy the specifications.

The isolation unit mechanically maintains the closed position for specified faulty doors, while bypassing door closure detection conditions and lock detection conditions to forcibly establish a state that satisfies conditions allowing the entire train to set off on its course. In North America, the American Public Transportation Association (APTA) standard creates a dependency between the emergency door unlocking unit and the isolation unit. In other words, it stipulates that operating the emergency door unlocking unit in the isolation state will force the doors to be unlocked if the isolation state is automatically canceled. An example of an interlocking mechanism is shown in Fig. 13.

2.6 Controller

The controller of the electrical driven doors implements high-precision and stable door opening and closing control through utilizing the features of the FCPM. In recent years, lots of information is measured and recorded in order to monitor not only control activity for opening and closing the doors, but also to confirm the state of the doors and analyze trouble during failures. The unit comes equipped with an automatic testing function for understanding the health of the doors, which are susceptible to daily changes, by means of self diagnostics. It is also compatible with communication protocols such as RS-485 based high-level data link control (HDLC) and Ethernet*1 in order to transmit information to conductors and train drivers through use of a monitor. The controller utilizes a single 32-bit high-performance CPU chip capable of simultaneously processing door control, communication functions and automatic testing functions. The software comes with a self-update function, and it can quickly perform specification and parameter changes as well as carry out version upgrades via the communication function and batch updating for the software by means of the portable test unit (PTU) described in Section 2.7.

2.7 PTU

There are many moving components incorporated into rolling stock doors, and since the doors directly interact with passengers, they determine whether a train can continue operation when a failure occurs. Therefore, determination needs to be made quickly regarding whether operations can continue by utilizing self diagnostics and displays that detail the cause of failures. The PTU is a dedicated piece of software used during failures that allows crew members to connect a PC to the door unit in order to display the details of the failure, perform monitoring and implement self diagnostics (see Fig. 14).

Expertise is required when making determination about failures, and ultimately, this is something that should be done by the manufacturer. However, since a quick determination needs to be made on site, we have prepared the PTU for use by our customers in order to contribute to smooth operations by supporting maintenance work on site.

3. Safety and Reliability Technology

3.1 Safety assessment during the design stage

Doors for rolling stock are required to operate with a high degree of safety and reliability since they are important pieces of equipment related to the boarding and alighting of passengers and they ensure the safety of passengers during train traveling. Therefore, the safety design concept must be closely examined during the design review process by means of techniques including failure modes effects and criticality analysis (FMECA) and hazard analysis, and the design must be revised when it does not fulfill the needed requirements. In addition, the doors need to be vandalism resistant to ensure that the door system does not suffer from any impact due to aggressive operation and mischievous acts. This is especially true of doors developed for the overseas market.

The RAMS analysis items required of rolling stock in North America are given below. An example (im-

*1: Ethernet is a trademark or registered trademark of Fuji Xerox Co., Ltd.

Item Name/ Functional identification	Function	Failure Mode	Failure Causes	Failure Effects			Severity Class (I/II/III/IV)		Failure Detection Means	Available Contingency/ Compensating Provisions/	Design Action/ Recommendation
				Item	Subsystem	System	Safety	Reliability			
Slider Vertical Direction	To fall Lock Pin (at locking operation). To pull Lock Pin (at unlocking operation).	Solenoid fails to actuate.	Seized. / loss of power supply / bad or poor connection.	Unable to push up the lock pin. (Unable to unlock)	Door cannot be opened. One door opening is out of service. Controller will send a Minor failure alarm "Open Time Out Error" to XXXX for display in the cab. Controller will continue to function.	Passengers cannot board/alight a car by this door opening. Possible delay.	NA	III	Controller will send a Minor failure alarm "Open Time Out Error" to XXXX for display in the cab.	Manual Door Release Handle (Inverter) and Manual Door Release Handle (Exterior) are provided. In addition, Train Attendant or station staff has to isolate the failed door. / Door Isolation device. / Replacement of Door locking device.	High reliable solenoid adopted. / Nil
Slider Vertical Direction	To fall Lock Pin (at locking operation). To pull Lock Pin (at unlocking	Solenoid fails to de-actuate.	Seized.	Unable to reach locked position. (Unable to lock)	Door can be open / close but door close loop cannot be made.	Train cannot start. Possible delay.	NA	III	Function check of solenoid.	Train attendee have to isolate failed door. / Door Isolation device. / Replacement of Door locking device.	High reliable solenoid adopted. / Nil
Slider Horizontal Direction	To lock and unlock when usual door opening and closing operates.	Broken of slider horizontal direction.	Fatigue / Overload.	Unable to lock and unlock.	Door cannot be opened / closed.	Passengers cannot board/alight a car by this door opening. Possible delay.	NA	III	Visual check	Train attendee have to isolate failed door. / Door Isolation device. / Replacement of Door locking device.	Slider is designed in consideration of the strength and the durability. / Periodical inspection of door lock device.
Roller	To move smoothly the Lock Pin.	Broken of roller.	Fatigue / Overload.	Unable to keep unlock condition. (Keep the condition of door lock.)	Door can be opened but then cannot be closed. And DCS will show open condition.	Emergency brake applied. Train will be delayed.	NA	III	Visual check	Train attendee have to isolate failed door. / Door Isolation device. / Replacement of Door locking device.	High reliable roller adopted. / Periodical inspection of door lock device.

Fig.15 FMECA example (image)

age) of FMECA is shown in Fig. 15.

(1) Reliability Prediction Report
(2) Availability Prediction Report
(3) Maintainability Analysis
(4) Preliminary Hazard Analysis
(5) FMECA (failure modes effects and criticality analysis)

3.2 Control technology

In order to further enhance safety and stability in the opening and closing control of doors, we are researching and developing a new control technology.

We have made use of our servo technology in the basic control of the doors, and we are utilizing triple feedback control which includes feedback for the thrust (current), speed and position in order to ensure delicate and smooth door operation (see Fig. 16).

The door closing delay during rush hour is one problem peculiar to doors that is often taken up for discussion. This problem occurs when the control pattern cannot follow up properly as a result of the need of a drive force during crowded rush hour operation that is more than 10 times the force required during normal operation. Therefore, we have adopted "external force suppression control" to carry out stable operation by measuring and negating external force. We have utilized an experiment for simulating a rush hour scenario in which 8 people are forcibly leaning on the doors. Under such a condition a delay of 10.0 seconds or more would be generated using a conventional control method, but we have achieved stable operations while significantly reducing delay to just 0.2 seconds (see Fig. 17, Table 1).

Electrical driven doors utilizing a lock unit for maintaining a firm closed door position are faced with

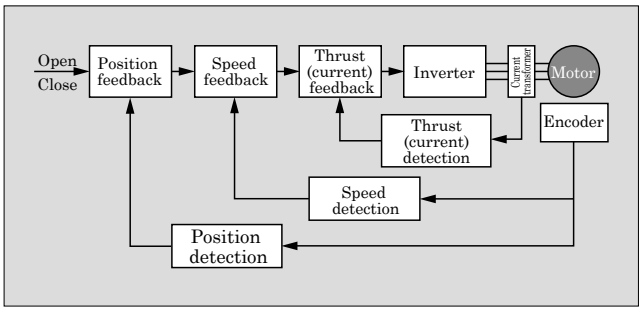

Fig.16 Triple feedback control

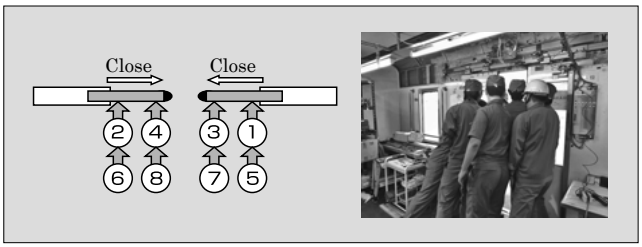

Fig.17 External force suppression control experiment

Table 1 Closing time based on rush-hour scenario

No. of people	Proposed model		Conventional model	
	Closing time (s)	Delay (s)	Closing time (s)	Delay (s)
0	3.33	–	3.15	–
1	3.36	+0.04	4.09	+0.94
2	3.41	+0.08	9.38	+6.23
4	3.51	+0.18	14.03	+10.88
8	3.55	+0.22	15.05	+11.90

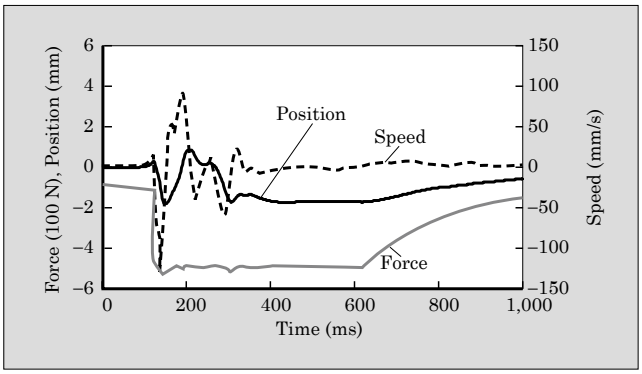

Fig.18 Push-back control experiment

challenges such as outfitting adjustment difficulties and failures. Therefore, we have been researching "push-back control" in order to achieve a firm closed door position that utilizes the motor. By maintaining the closed door position via motor control, we are aiming to ensure safety through the use of a simplified lock unit without the need to implement detailed adjustments during outfitting. Instant determination is made regarding doors that are opened as a result of external forces, such as passengers trying to force open doors, and prevention of these types of scenarios is made through a strong push back (see Fig. 18).

Verification has been made with the control system mounted to rolling stock currently in use. The results showed that for 150,000 door opening and closing events, approximately 300 instances of forced door opening events occurred, but the doors were never opened more than 1.0 mm, thus demonstrating the safe control of the system.

3.3 Standby redundant system controller

There are many doors in a train, and if one of the doors were to fail, this could cause an impact on not only the rolling stock, but also the entire route.

Therefore, the doors must be highly reliable. If a failure were to occur using a conventional door unit at an intermediate station, passengers would have to move to an alternate train, and this would cause a huge delay to occur. Fuji Electric has duplicated the internal structure by adopting a standby redundant configuration, and as a result, high reliability can be maintained during failures by utilizing the controller on the stand-by side for carrying out control (see Fig. 19).

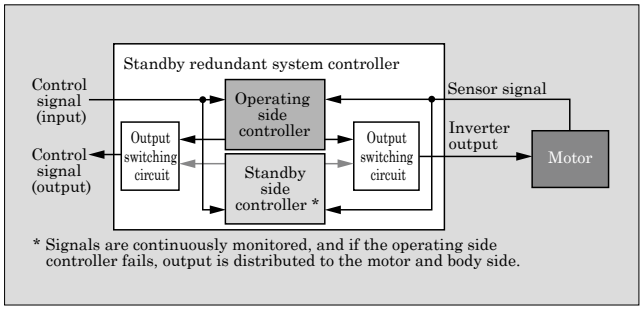

Fig.19 Standby redundant system controller

4. Postscript

Fuji Electric's doors for electrical rolling stock, configured with either a linear motor system or FCPM system, are being used by customers in Japan and overseas. In the future, we plan to further enhance the safety and reliability of our doors for electrical rolling stock in order to satisfy the expectations of our customers, while being continuously conscious of the doors' intimate proximity to passengers and extremely important role in the stable operation of the rolling stock.

References

(1) Umezawa, K. Power Electronic Devices for Railway Vehicles. FUJI ELECTRIC REVIEW. 2012, vol.58, no.4, p.175-181.

Railway Static Power Conditioner for Shin-Kurobe Substation of Hokuriku Shinkansen

OSO, Hiroshi* KANEKO, Tomomi* SUZUKI, Akio ‡

ABSTRACT

Fuji Electric has delivered a railway static power conditioner (RPC) to Shin-Kurobe Substation, located between Nagano and Kanazawa on the Hokuriku Shinkansen Line. This equipment is composed of an inverter and an inverter transformer. While the trains run, it compensates for the unbalanced load in 3 phases and voltage fluctuation by interchanging power between two circuits in the direction of Nagano and Kanazawa. It also compensates for the harmonic current generated by trains. We developed a high-capacity downsized inverter by engaging a water-cooling system and equalizing the current sharing of insulated gate bipolar transistors (IGBTs). We adopted a gapless transformer for the inverter transformer to achieve low-noise level and high reliability.

1. Introduction

As part of the Projected Shinkansen Line Plan, the Hokuriku Shinkansen started service between Nagano and Kanazawa from March 14, 2015, following the section that had already opened between Takasaki and Nagano. The route map of the Hokuriku Shinkansen is shown in Fig. 1.

Six substations have been built between Nagano and Kanazawa: Shin-Nagano, Shin-Joetsu, Shin-Kurobe, Shin-Takaoka, Shin-Hakusan and Hakusan Depot. Among these, the Shin-Kurobe Substation has the smallest short-circuit withstand capability and the longest feeding section, so that it is subject to fluctuations in the receiving voltage. To suppress these fluctuations, Fuji Electric has delivered a railway static power conditioner (RPC).

This RPC has adopted inverters and inverter transformers based on the latest power electronics technologies and the leading-edge control technologies have been applied. This paper describes an overview of the RPC and its control technologies.

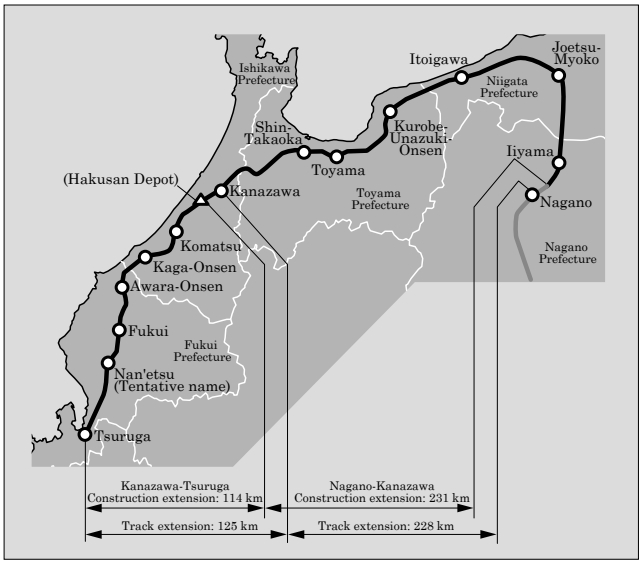

Fig.1 Route map of the Hokuriku Shinkansen

2. Overview of Railway Static Power Conditioner (RPC)

2.1 Concept of power interchange

The concept of power interchange is shown in Fig. 2. The AC substation for the Shinkansen uses a Scott connection transformer and a roof-delta connection transformer to step down the voltage for 2 feeder lines of single-phase 60 kV AC and feeds the power to the main phase and teaser respectively. When the voltages on these 2 lines become unbalanced due to train run, the voltage on the 3-phase side also becomes un-

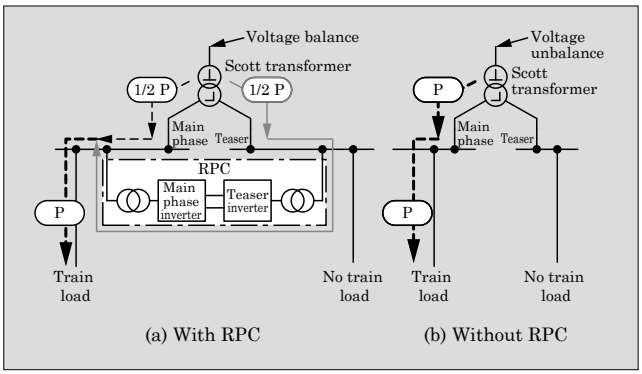

Fig.2 Concept of power interchange

* Industrial Infrastructure Business Group, Fuji Electric Co., Ltd.
‡ Corporate R&D Headquarters, Fuji Electric Co., Ltd.

balanced in 3 phases, resulting in a large voltage fluctuation at a specific phase. To prevent this, we use an RPC and connect a power converter to the buses of the 2 single-phase lines on the feeding side of the feeding transformer to interchange effective power between circuits and compensate reactive power for power feeding simultaneously. This compensates for the unbalanced voltage in 3 phases and voltage fluctuation, as well as harmonic current of high voltage generated by trains. If the power cannot be interchanged due to the substation equipment configuration, the RPC can be operated as a static var compensator (SVC).

2.2 Configuration and specifications of the RPC

The single-line diagram for the Shin-Kurobe Substation is shown in Fig. 3. The Shin-Kurobe Substation is comprised of two 154 kV receiving lines, 4 feeder lines and the RPC. When the loads do not match between the directions of Nagano and Kanazawa, the RPC makes the feeding powers of the main phase and teaser match within the range of the capacity of the RPC to balance the receiving voltages.

Figure 4 shows the basic configuration of the RPC

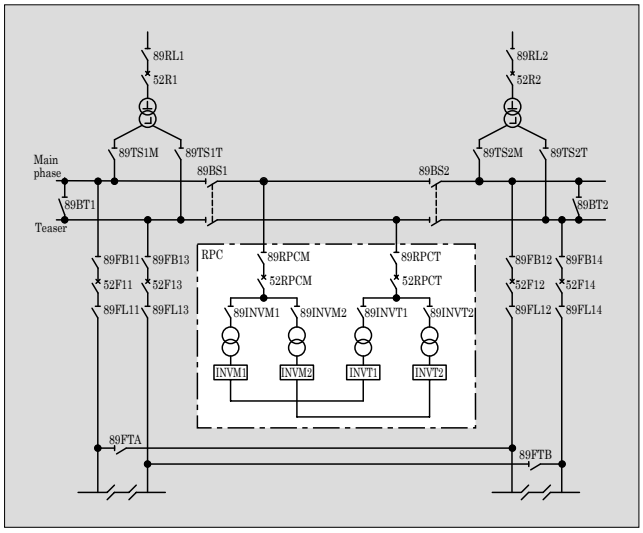

Fig.3 Single-line diagram for Shin-Kurobe Substation

Table 1 Major specifications of the RPC

Item	Specification
Rated capacity	15 MVA (7.5 MVA × 2 phases) × 2 banks
	RPC: 15 MVA (7.5 MVA × 2 banks) SVC: 30 MVA (15 MVA × 2 banks)
Frequency	60 Hz
Rated voltage	60 kV
Inverter output voltage	2,460 V
DC voltage	2,200 V × 2
Bank configuration	7.5 MVA (3-level inverter × Parallel quad) × 2 phases
Carrier frequency	540 Hz (9-pulse sine wave PWM)
Equivalent carrier frequency	4,320 Hz (Quad × 2)
DC capacitor capacity	24.3 mF × 2 banks
Cooling	Pure water circulation + Antifreezing solution circulation + Wind-cooling
Control	Effective power interchange control/reactive power compensation control (RPC mode) Reactive power compensation control (SVC-Q mode) Feeding voltage constant control (SVC-V mode) Harmonic compensation (3rd, 5th, 7th and 9th harmonics compensation with a function to stop compensation during resonance)

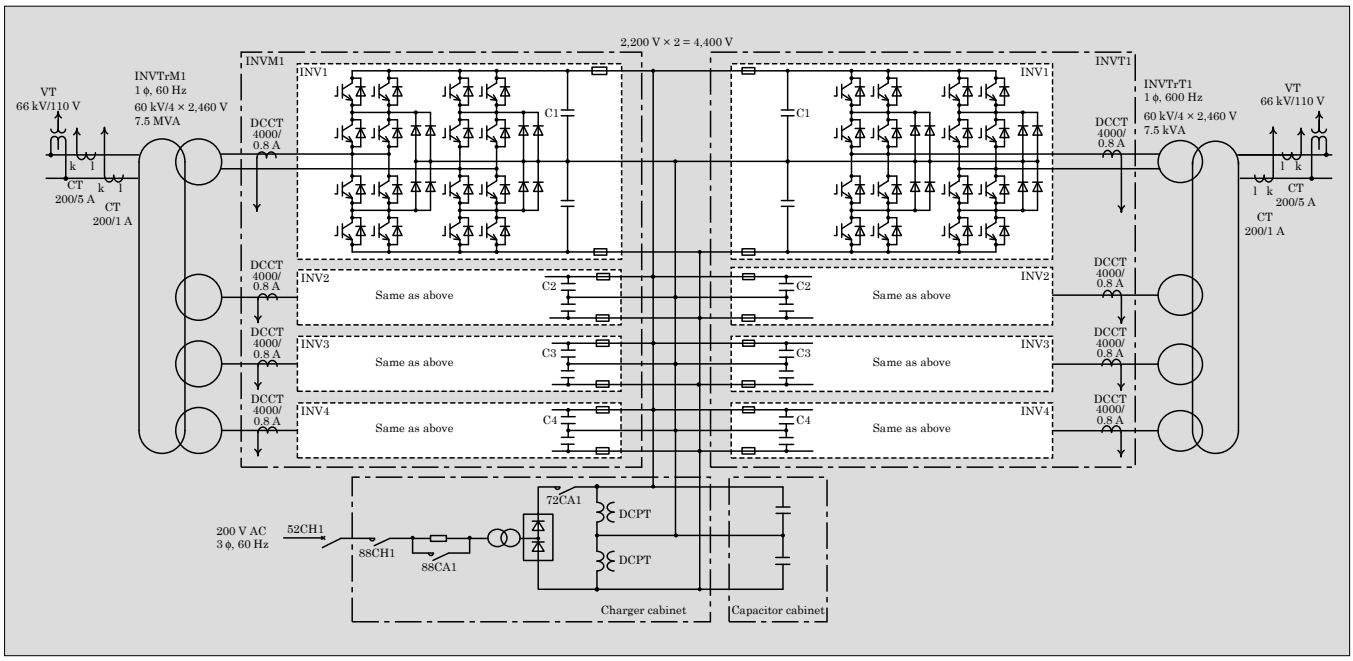

Fig.4 Basic configuration of RPC

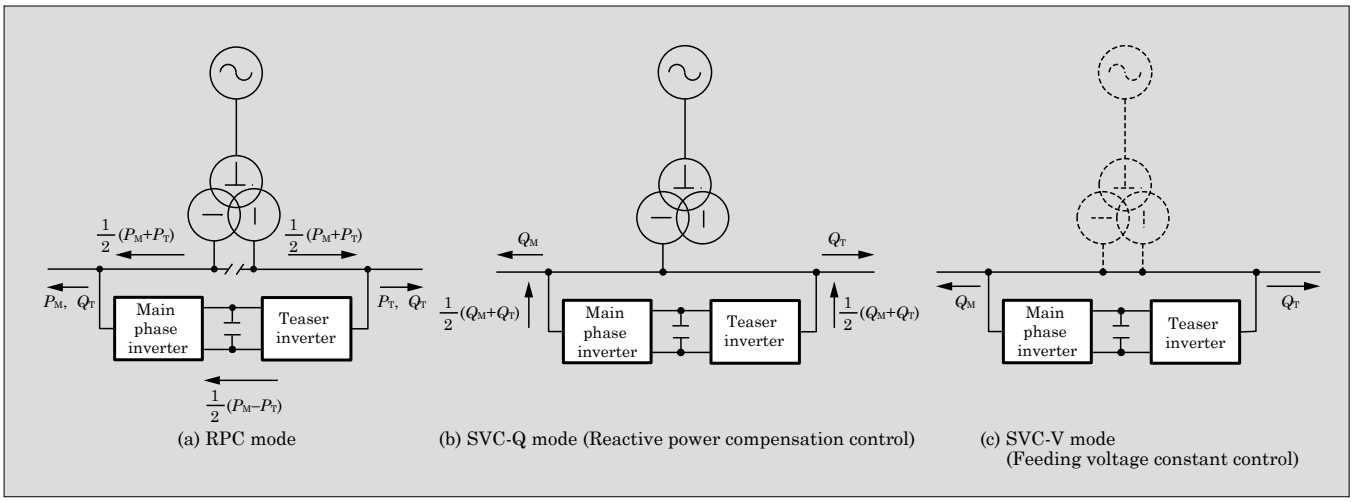

Fig.5 Operation modes of the RPC

at the Shin-Kurobe Substation. The RPC connects the 2 sets of single-phase inverters on the main phase side and teaser side from the feeding buses of the main phase and teaser respectively in the DC current section via circuit breakers and inverter transformers. This makes a configuration in which the AC currents of the main phase and teaser are interchanged through the use of DC currents. The RPC includes 2 sets of a 7.5 MVA system, making for a total capacity of 15 MVA. Table 1 lists the major specifications of the RPC.

2.3 RPC operation

The operation modes of the RPC are shown in Fig. 5. Normally, the RPC is operated in the RPC mode shown in Fig. 5 (a). When the effective powers under the load of the feeding side are different between the main phase and teaser, the active power of half the difference is interchanged through the RPC. This equalizes the effective powers of the main phase and teaser on the secondary side of the Scott connection transformer and balances the 3-phase effective power on the primary side of the transformer. If the main phase and teaser are not switched directly in the substation, the RPC is operated in the SVC-Q mode (Reactive power compensation control) shown in Fig. 5 (b). If the facility is not operated as a substation for some reason, the RPC is operated in the SVC-V mode (Feeding voltage constant control) shown in Fig. 5 (c). The details of the controls are described in Chapter 5.

3. Inverter System

The appearance of the inverter system is shown in Fig. 6. The inverter system is composed of 2 cabinets, each of which is mounted with four 3-level single-phase inverter units, and one cabinet of a capacitor bank.

The appearance and circuit diagram of the inverter unit are shown in Fig. 7.

Fig.6 Inverter system

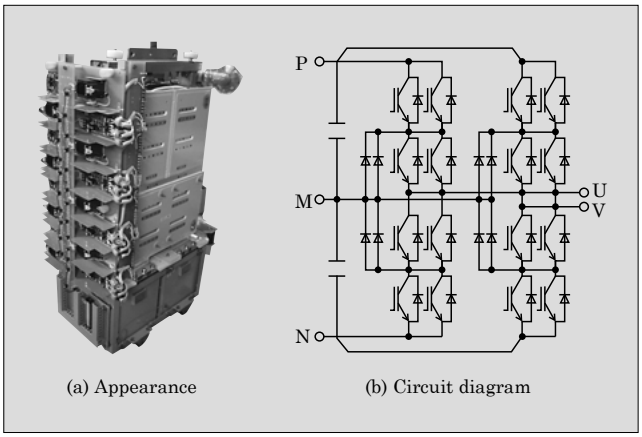

Fig.7 Inverter unit

3.1 Inverter unit

The inverter unit we developed was designed to increase capacity through the parallel connection of 2 modular insulated gate bipolar transistors (IGBT) rated at 4.5 kV, 1.2 kA. One unit has a capacity of 3.3 MVA. The key development points are described in the following points.

(1) Equalizing the current sharing of IGBT

To obtain the maximum performance of the parallel-connected IGBTs, equalizing the current sharing

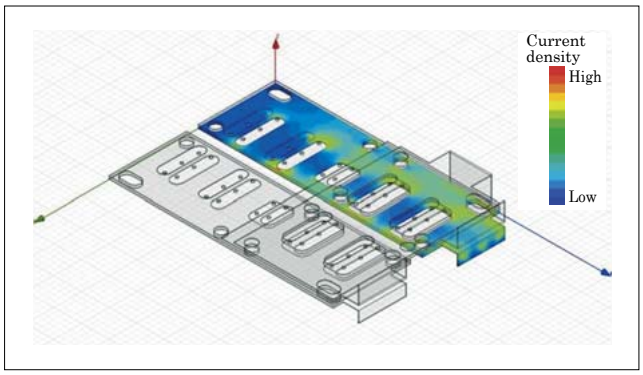

Fig.8 Sample result of 3D magnetic field analysis

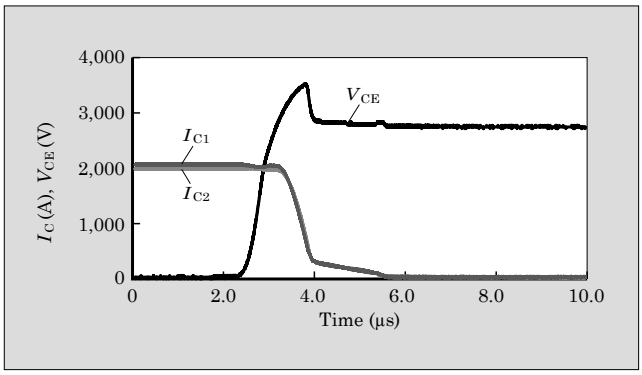

Fig.9 Turn-off waveforms of 2 parallel-connected IGBTs

of each IGBT is necessary. We designed a proper layout of the parts including DC capacitors and adopted laminated bus bars for the main circuit line to ensure low inductance. We calculated the current density, inductance and generated loss from bus bars through 3D magnetic field analysis to determine the configuration of the laminated bus bar. In this analysis, we conducted circuit simulation to calculate the frequency components of the current flowing through each bus bar in each switching mode of a pulse width modulation (PWM) inverter and evaluate the current density distribution for each frequency component. Figure 8 shows a sample result of the 3D magnetic field analysis. The result showed that there are some sections with high current density. In a continuous current flowing test using an actual machine, we evaluated the temperature increase of such sections and confirmed that the temperature was lower than the allowable level of the bus bars.

(2) IGBT cooling method

We used a water-cooling method for the unit to cool the IGBT effectively and improve its availability. Moreover, to allow further unit downsizing, we developed a low-profile heat sink that does not use a water-cooling hose for cooling the IGBT. During the development of this cooling mechanism, we conducted long-term corrosion verification using a water-cooling model to ensure reliability.

The characteristics of IGBT change depending on the temperature. In order to equalize the current sharing and loss of 2 parallel-connected IGBTs, we devised a layout of 2 IGBTs in the heat sink to make their case temperatures be the same.

(3) Unit structure

We designed the unit structure to allow the unit to be drawn out easily from the cabinet without a need for a lifter. This has improved workability and safety during unit replacement, maintenance and inspection.

3.2 Inverter unit evaluation

We evaluated switching loss by conducting a switching test and measured the current shared between the parallel elements. We confirmed that the current shared between 2 parallel elements was almost equal and the current unbalance ratio was 10% or lower. In the field check of the cutoff performance of the unit that considered system overcurrent under abnormal conditions such as system disturbance, the jumping voltage at turn-off was about 3,500 V, even when a current of about 4 times the rated peak current of the system (4,000 A) was cut off. This voltage is sufficiently below the allowable voltage of the IGBT (4,500 V) so that the system can be stopped safely if an abnormality occurs. Figure 9 shows the turn-off waveforms of the IGBT under this condition.

4. Inverter Transformer

The inverter transformer is designed to have a multi-output structure. The appearance is shown in Fig. 10 and the major specifications are listed in Table 2.

In order to reduce the noise of the inverter trans-

Fig.10 Inverter transformer

Table 2 Major specifications of the inverter transformer

Item	Specification
Rated capacity	7.5 MVA
Rated voltage	60 kV/2,460 V × Quad
Rated frequency	60 Hz
Number of phases	Single phase
Cooling method	Oil immersed self-cooled
Boundary noise	50 dBA
Number of transformers	4 units (2 phases × 2 banks)

former, we adopted a gapless type core to achieve a similar structure to normal transformers and created a double-layered tank structure. The noise at the site boundary has been reduced to 50 dBA.

Since the inverter transformer is excited by an inverter through the application of square waves, the duty on the core is more severe than sine wave excitation. To address the issue, we studied the no-load loss characteristics, saturation characteristics, no-load current characteristics, DC-biased magnetic characteristics and other characteristics of sine wave excitation and inverter excitation respectively to determine the optimum magnetic flux density, in order to reduce the noise, improve the reliability and miniaturize the system.

Furthermore, we designed a cooling mechanism by allowing for the loss increase during operation under the PWM control of the inverter.

5. Control Technologies

Figure 11 shows the block diagram for control logic of the RPC mode. In the RPC mode, the effective powers and reactive powers of the substation outputs of the main phase and teaser are calculated from the feeding voltage and feeding current of the substation. The RPC interchanges half the difference in the effective powers between the main phase and teaser to equalize the effective power outputs of the main phase and teaser of the Scott transformer. On the other hand, reactive power compensation is conducted individually for the main phase and teaser. The RPC outputs a reactive power that has reverse polarity of the reactive power of the substation output to counteract the reactive power output of the Scott transformer. When the composition capacity of the effective power interchange amount (reference) and the reactive power compensation amount (reference) of the RPC is within the rated capacity of the RPC, the current received by the Scott transformer is balanced in 3 phases with a power factor of 1. When the composition capacity exceeds the rated capacity of the RPC, the RPC limits the effective power interchange amount and reactive power compensation amount in the same proportion (equal ratio limitation) so that the output of the RPC does not exceed the rated capacity.

Figure 12 shows the block diagram for control logic of the SVC-Q mode. The SVC-Q mode calculates the reactive power of the substation output from the voltage and current of the feeding phase sent from the substation. The RPC outputs a reactive power that has reverse polarity of the calculated reactive power to perform reactive power compensation.

In the RPC mode and SVC-Q mode, the surplus capacity from the output of fundamental frequency components (used for the effective power interchange and reactive power compensation) is used for harmonic compensation. As shown in Fig. 11 and Fig. 12, Fourier transform is applied to the detected current sent from the substation to extract harmonics of the 3rd, 5th, 7th and 9th components to be compensated, and then Fourier inverse transform is applied to the extracted components to generate harmonic current references. If the resonance frequency generated from the stray capacitance between the feeder line and ground and the inductance of the feeder line is close to the harmonic number to be compensated, the harmonic may be amplified. Therefore, we provided a function that determines the amplification of harmonic when any Fourier-transformed component exceeds the judgment value, and stops the harmonic compensation of that component. This function ensures stable operation without amplifying harmonics even when the resonance frequency becomes close to the harmonic num-

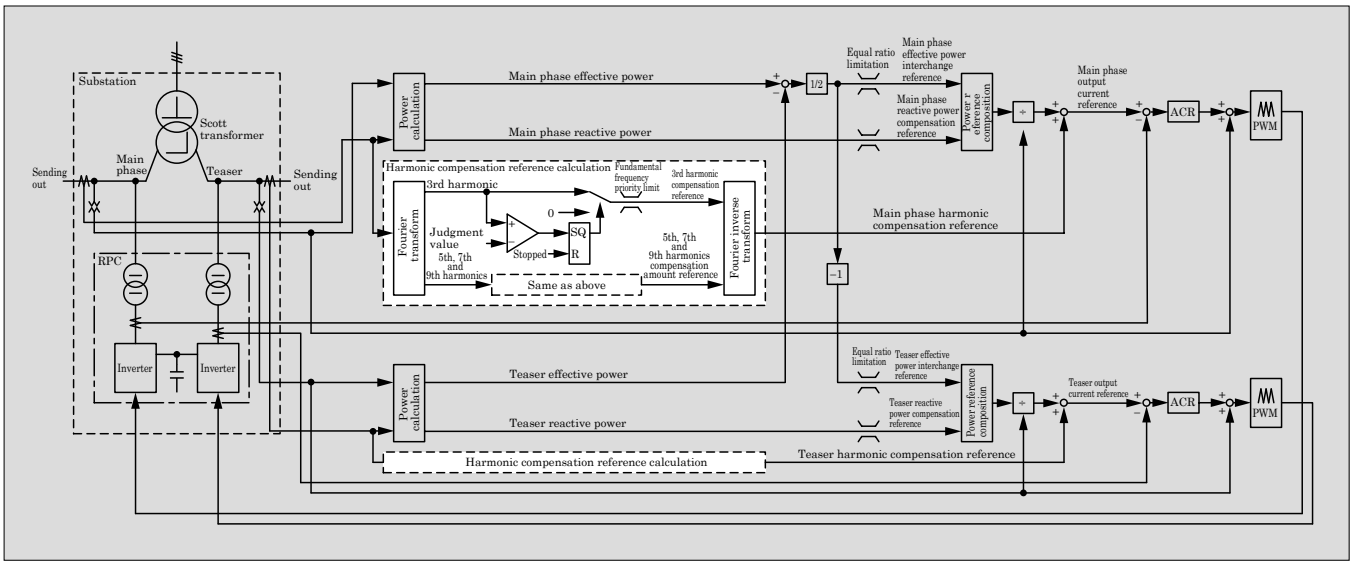

Fig.11 Block diagram for control logic of RPC mode

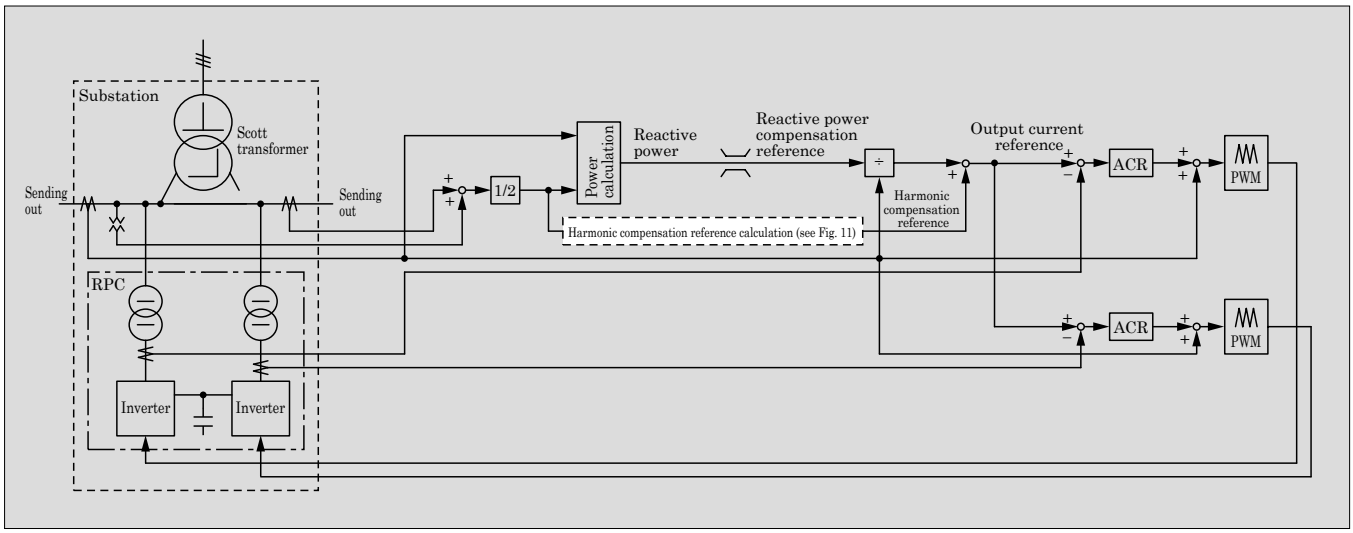

Fig.12 Block diagram for control logic of SVC-Q mode

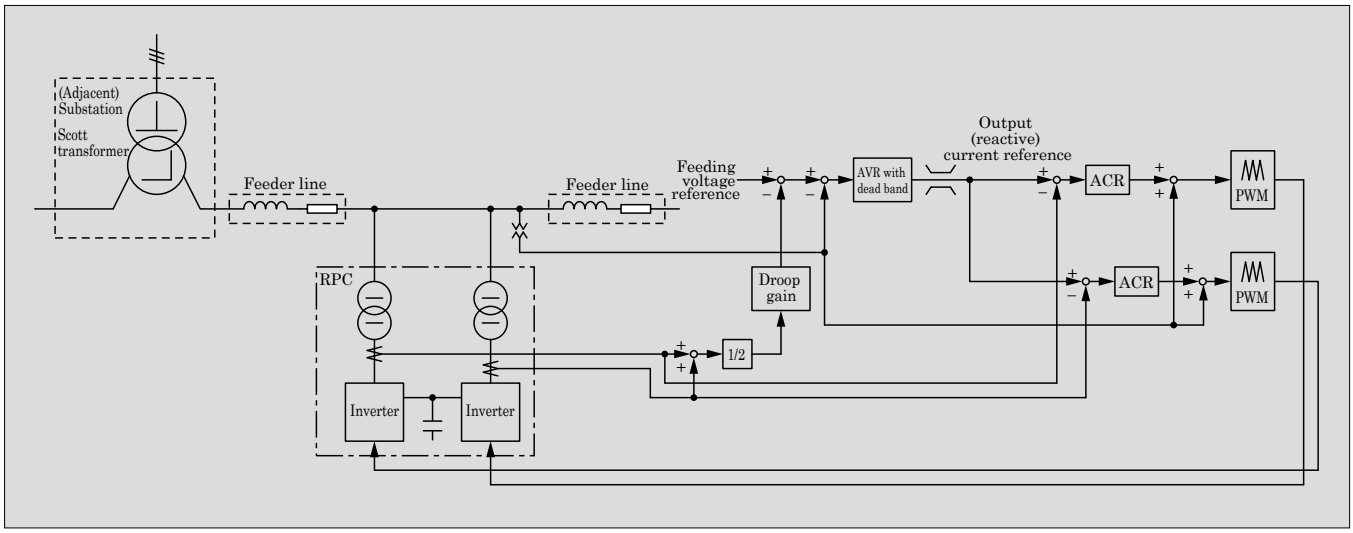

Fig.13 Block diagram for control logic of SVC-V mode

ber to be compensated due to the change in the impedance of the feeder line or the stray capacitance between the wire and ground caused by the configuration switching of the feeding system or weather conditions.

Figure 13 shows the block diagram for control logic of the SVC-V mode. In the SVC-V mode, the RPC is not connected directly in the substation but connected to a certain point in the feeding system. Consequently, it does not provide effective power interchange or reactive power compensation but controls the voltage of the connection point. The voltage is controlled through the adjustment of the reactive power output so that the voltage of the connection point is kept within the set range. Because we only need to keep the feeding voltage within a certain range, we set a dead band for the voltage control to suppress the reactive power output and reduce system loss. Since the RPCs in 2 banks individually detect the voltage of the connection point for voltage control, a compensation loop has been provided to equalize the reactive power outputs between the 2 banks.

6. Postscript

This paper described an overview of the RPC delivered to the Shin-Kurobe Substation of the Hokuriku Shinkansen and its control technologies. With the inauguration of the Hokuriku Shinkansen, this RPC started operating smoothly. Fuji Electric continues to promote the development of high-performance power converters based on power electronics technologies.

In closing, we would like to express our deep gratitude to Japan Railway Construction, Transport and Technology Agency and other parties concerned for the guidance and cooperation they gave in the development and operation of the RPC.

Multifunctional On-Shore Power Systems for Harbors and Shipyards

MIYASHITA, Tsutomu* UMEZAWA, Kazuyoshi ‡ JOICHI, Hiroshi ‡

ABSTRACT

In recent years, even in the maritime and shipbuilding industries, reduction of environmental impact has come to be required. To meet that issue, Fuji Electric has developed a multifunctional on-shore power system equipped with both power supply functions for the on-board power systems and load testing functions for the on-board generator. Since this system is installed outdoors, we examined its placement to make maintenance easy and give it an effective cooling system and decided to install the main facilities in a container of use outdoors. The containers can be connected in parallel so that it is easy to enlarge the capacity. The facility's characteristic control functions include abilities to supply power to on-board power systems at the desired voltage/frequency and to conduct a load test for the on-board generators via load resistor or power regeneration.

1. Introduction

In recent years, even in the maritime and shipbuilding industries, reduction of environmental impact has come to be required. To meet that demand, Fuji Electric has developed a multifunctional on-shore power system equipped with both power supply functions for on-board power systems and load testing functions for on-board generators from commercial (internal) system. Considering that this system is to be installed outdoors in areas subject to salt damage such as ports and shipyards, we decided to use a container to install converter boards incorporating power conversion units and controlboards. This paper describes the structure of the container-housed system and converter board and the control technologies of the power conversion unit.

2. Overview

2.1 System specifications

The specifications of the system in a single container are as follows. Connecting several containers makes it possible to enlarge the capacity. Both the input and output voltages can be changed as desired.

(a) Capacity: 1,667 kVA continuous, overload capability 115%, 1 hour
(b) Input power supply: 6,600 V or 3,300 V, 50 Hz or 60 Hz
(c) Output power supply: 11,000 V or 6,600 V, 50 Hz or 60 Hz
(d) Dimensions of container: W7,400 × D2,600 × H3,200 (mm)
(e) Mass of container: Approx. 21 t

2.2 Characteristic of control functions

(a) Power can be supplied from a commercial (internal) system to the on-board system at the desired voltage and frequency.
(b) A load test for the on-board generators can be conducted via power regeneration or load resistor. The load pattern for the test (effective power, power factor and power change amount) can be set as desired and the repeatability is high.
(c) Even when large excitation inrush current flows due to the on-board transformer being turned on, power supply can be continued without tripping.
(d) When several container-housed systems are used, power supply is not affected by a partial equipment malfunction but can be continued through reduced capacity operation.
(e) It is possible to perform automatic synchronous parallel in and parallel off*1 to/from a commercial system or on-board system.
(f) Disturbance in a commercial system can be suppressed when a fluctuation occurs in the on-board system due to an accident with the on-board power system.
(g) Remote operation and state monitoring are possible from the ship.

3. Structure of Installing Converter Boards and Other Equipment

3.1 Structure overview

This system will be installed outdoors in ports or

* Industrial Infrastructure Business Group, Fuji Electric Co., Ltd.
‡ Power Electronics Business Group, Fuji Electric Co., Ltd.

*1: Parallel off: Disconnecting an electrical facility from a power system

shipyards; however, it is not easy to design individual converter boards and controlboards for outdoor use in terms of dimensions and cost. Therefore, we decided to install the entire system in a container suitable for outdoor environments. We designed a structure that makes it possible to enlarge capacity by having a parallel connection of several containers which contain systems having the same configuration. Figure 1 shows the appearance of the container-housed system, Fig. 2 shows its dimensional diagram and Fig. 3 shows the board layout inside the container. Air-cooled load resistors are mounted on the roof of the container. There is an aisle in the center of the container, and the controlboards, converter boards and auxiliary boards are installed so that the master side and slave side are placed opposite each other. Moreover, a water-cooling heat exchanger is placed at the end of the aisle to allow all regular maintenance works to be performed from the aisle. The container is not completely sealed but is pressurized by taking in outside air with ventilation fans equipped with salt-resistant filters. This prevents sea-salt particles and dust from entering through openings.

Fig.1 Container-housed system

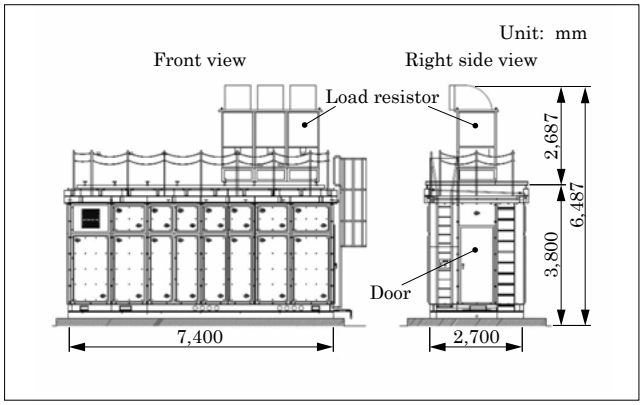

Fig.2 Dimensional diagram of container-housed system

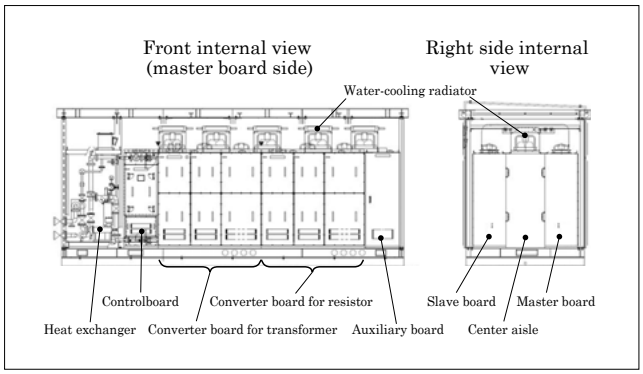

Fig.3 Board layout inside container

This system consists of 2 converter boards, one for the transformer and the other for the resistor, and their basic structures are the same. As a result, the equipment in the converter board such as power stacks, reactors and capacitors are also the same, which makes maintenance easy. These are based on the converter board for wind-power generation to optimize their structure and cooling system.

3.2 Cooling the facilities inside container

Each converter board of the system contains 3 power stacks with insulated gate bipolar transistor (IGBT) elements mounted. To ensure efficient cooling of the elements, we used an aluminum water-cooled heat sink.

The reactor is also a water-cooled type. We adopted a direct water-cooling method that lets refrigerant flow directly inside the copper windings to obtain high cooling capacity. For the refrigerant, we use pure water that transports more heat compared with antifreeze solution. The use of pure water faced the following problems:

(a) The heat sink of the power stack is made of aluminum so it may be corroded by pure water used as refrigerant.
(b) The existence of aluminum and copper in the same water-cooled system might cause bimetallic corrosion in the system.

We therefore conducted a long-term corrosion test and confirmed that a coating formed over the aluminum surface could suppress corrosion and ensure quality.

On the other hand, there are some pieces of air-cooled equipment in the converter board and controlboard. Consequently, it was necessary to cool the air inside the container. We mounted water-cooling radiators in the ceiling of the container to cool the air discharged from the converter boards with these radiators, release the air to the aisle and feed it again to the board. The pure water piping for cooling the radiators is connected in parallel with the piping for cooling the converter boards (see Fig. 4).

There are 3 water-cooled systems: for the converter boards on the master side, converter boards on the slave side and radiators. The power stacks and reactors in the converter boards are directly cooled with pure water while the air-cooled equipment in each board is cooled with the radiators using circulated air. Consequently, it was extremely important to have a

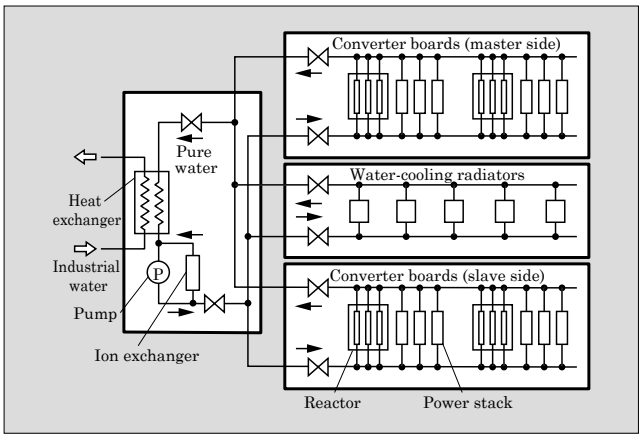

Fig.4 Diagram of water-cooling systems inside container

good thermal cooling balance. We used thermal analysis software and a model shown in Fig. 5 to analyze the thermal cooling of each piece of equipment and the air flow inside the container (see Fig. 6) and determined the required amount of pure water flow and number of radiators. Based on the result, we decided to supply 404 L/min of pure water from the heat exchanger and distribute 127 L/min to the converter boards on both sides respectively and 150 L/min to radiators.

Next, we used piping analysis software to analyze the pressure loss in each area of piping and verified whether the specified flow could be obtained or not. The sections with a potential risk of insufficient flow

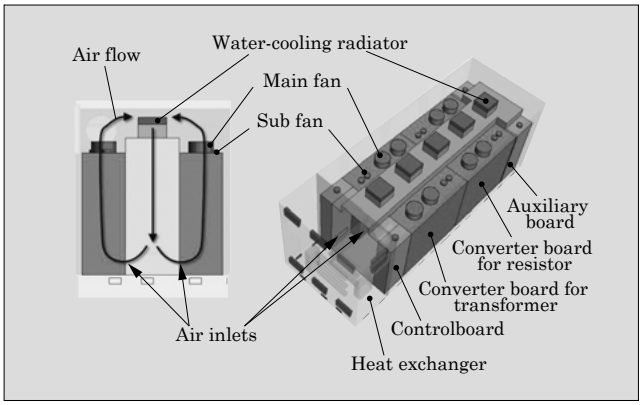

Fig.5 Air flow analysis model of container

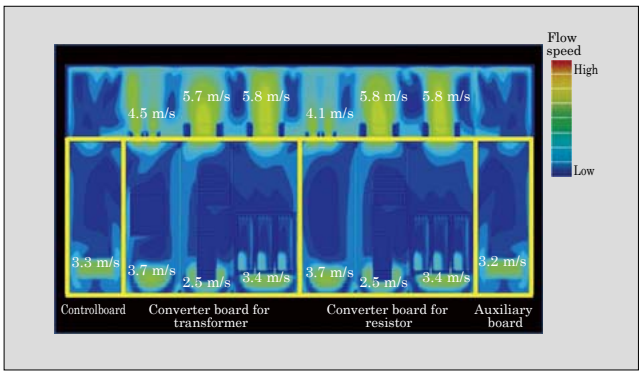

Fig.6 Result of the air flow analysis inside container

were improved through the use of a pipe with a larger diameter or by changing over to equipment that loses less pressure.

The heat exchanger was designed to provide cooling by using industrial water supplied from outside, and the instruments are arranged in positions that make maintenance easy. With these efforts, we have succeeded in building the optimum structure and cooling system.

4. Control Technologies of Power Conversion Unit

This system switches the control mode of the same power conversion unit between power supply mode and load test mode to provide 2 different functions of supplying power to the on-board power systems and conducting a load test for the on-board generators.

The control technologies of the power conversion unit are described below with an example of supplying up to 5,000 kVA power to a ship.

4.1 Control in power supply mode

To supply up to 5,000 kVA power to a ship, 3 power conversion units of 1,667 kVA should be operated in parallel (3 container-housed systems connected in parallel).

As a power supply, this system provides the following functions:

(a) When the on-board electrical facility operates at light load, the parallel operation is changed from using 3 power conversion units to using 2 units to improve efficiency.

(b) If one of the power conversion units breaks down, the broken unit is paralleled off and the operation is continued through the use of the other healthy units.

(c) Power supply is switched without instantaneous interruption from the on-board generator to the system and vice versa.

In order to share the load to ensure stable operation, the 3 parallel power conversion units calculate the effective power component and reactive power component from the load current. The load between the parallel units is balanced through a combination of the droop control that drops the frequency of output power inversely proportional to the effective power component and the droop control that drops the output voltage inversely proportional to the reactive power component.

For parallel in and parallel off between the power conversion units, automatic load shifting control is used to control the load balance gradually so that the load does not change abruptly for the operating unit. Figure 7 shows the power flow in the power supply mode. The converter 1 converts the power of 6.6 kV, 50 Hz or 60 Hz received from a commercial (internal) system to direct current, and controls the input current

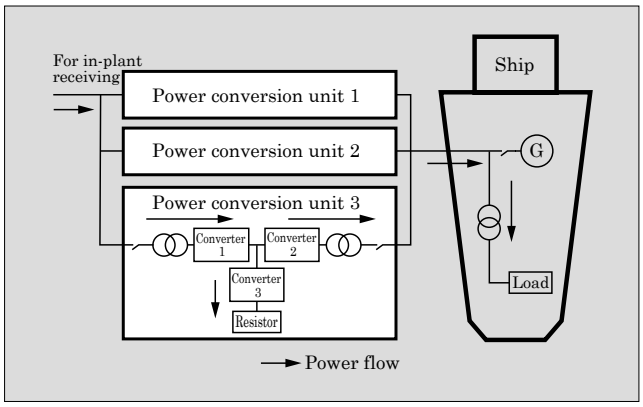

Fig.7 Power flow in power supply mode

so that it has a power factor of 1 and distortion of 5% or less.

The converter 2 converts and outputs it to the ship side according to the frequency and voltage of the on-board system. The operation equalizes the loads between the 3 power conversion units. Figure 8 shows the waveforms at parallel in and parallel off when 2 power conversion units are used. When one unit is operating and the second unit starts operation for parallel in, the second unit preparing for voltage paralleling synchronizes with the first unit by following the voltage and frequency. When a circuit breaker is turned on after the synchronization, the paralleled-in second unit remains in parallel status without current flow. After that, by gradually canceling the voltage following compensation at parallel in, the paralleled-in unit shares the load gradually and the cross current between the parallel units stabilizes within 5%. Figure 9 shows the waveforms when 2 units are operating in parallel and one of them breaks down. When 2 units are operating by sharing the load and one of them breaks down and stops, stable power supply is continued with the remaining active power conversion unit.

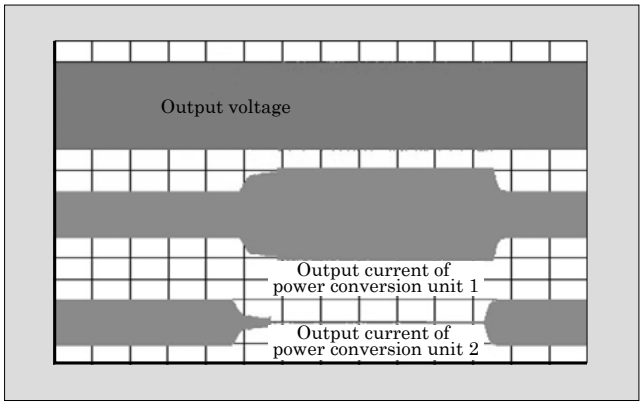

Fig.8 Waveforms at parallel in and parallel off

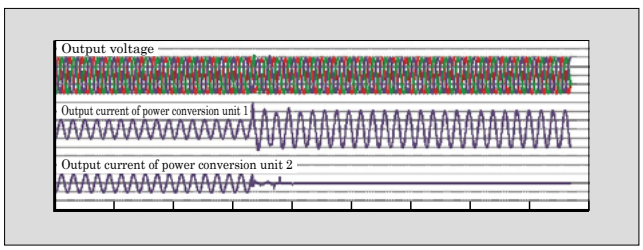

Fig.9 Waveforms when 2 units are operating in parallel and one of them breaks down

4.2 Control in load test mode

The power flow in the load test mode is shown in Fig. 10. To perform the load test of the on-board generators, the control mode is changed from the power supply mode described above to the load test mode in which the converter 2 connects to the generator output voltage for the control by following the power and power factor references.

As shown in Fig. 10, the power from the generator is returned to the commercial (internal) system. This allows the test to be performed without consuming energy in a load resistor as in the case of conventional method. If, however, the power cannot be returned to an electric power company, it must be consumed in the internal electrical facility. In order to continue the load test smoothly, the converter 3 is operated to consume the power in the resistor. If a system error such as instantaneous interruption occurs during the generator test, the converter 1 continues the connection and operation [fault ride through (FRT) function]. Consequently, when the power cannot be returned to the system, the converter 3 is operated to consume it in the resistor.

In the sudden load change test of the generator load test, applying 5,000 kVA with stepwise changes generates an abrupt reverse power flow to the system, causing voltage fluctuation. To prevent this, the system has a function to change the regeneration power gradually to prevent voltage fluctuation. Figure 11 shows the current waveform during the test. Converter 2 operates to address the abrupt increase of the generator load and converter 1 outputs the power to the receiving side at the specified power change ratio. The surplus power is consumed in the resistor connected to converter 3 so that the system can continue operation.

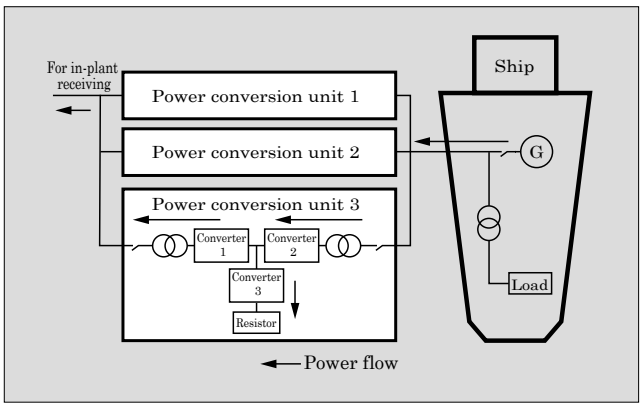

Fig.10 Power flow in load test mode

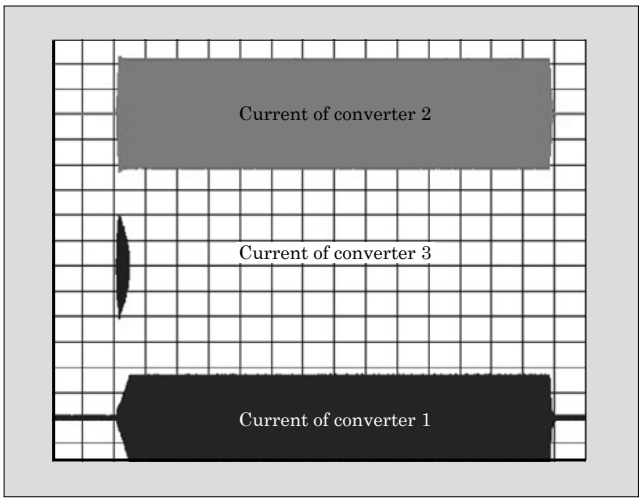

Fig.11 Waveform during sudden load change test

5. Postscript

This paper described the structure and control technologies of a multifunctional on-shore power system equipped with both power supply functions for the on-board power systems and load testing functions for the on-board generators. Fuji Electric is committed to making further efforts to improve the functions of the system in order to expand its applications.

Simulation Technology for Power Electronics Equipment

MATSUMOTO, Hiroyuki* TAMATE, Michio* YOSHIKAWA, Ko*

ABSTRACT

As there is increasing demand for higher efficiency and power density of the power electronics equipment, it has become more important to develop the equipment by connecting the design of wiring structure, cooling structure and electromagnetic interference (EMI), which were previously designed individually. Fuji Electric is working on the realization of such a connection by using a device simulation model. This simulation model makes it possible to understand the switching characteristics after the implementation into circuits. In addition, the simulation result can effectively be applied to the design of the other components. Since it is now possible to estimate the temperature of a component and an EMI noise level precisely at the beginning of the design stage, the cooling structure and EMI filters can be developed effectively shorter period than before.

1. Introduction

Fuji Electric's power electronics technology is one of its core technologies for achieving energy creation in photovoltaic power generation and wind power generation, as well as energy savings in the efficient utilization of the created energy. Power electronics equipment has already become prevalent in a wide range of applications, but in recent years, it has been required to achieve higher efficiency and power density in order to fulfill the increasing demands of efficient use of energy resources. In addition, the range of application for power electronics equipment needs to be expanded to meet the diverse requirements of customers, while a shorter development time is also demanded to ensure the timely release of products that meet market needs.

Fuji Electric has made use of a variety of simulation technologies to develop products that meet these demands. However, there is also a need to further enhance our simulation technology in order to satisfy even more stringent demands in the future. The main purpose of this paper is to describe our high-precision device simulation model, which is capable of linking with separately performed simulations related to wiring structure design, cooling structure design and electromagnetic interference (EMI) design. By using this simulation technology, we are able to determine the efficiency and size of equipment during the initial development stage, as well as shorten the development period by reducing the number of prototypes.

* Corporate R&D Headquarters, Fuji Electric Co., Ltd.

2. Device Design Simulation Technology

2.1 Design elements in the main circuit of power electronics equipment

Figure 1 shows the main design elements in the main circuit of power electronics equipment. Power electronics equipment utilizes high-speed switching by means of power devices such as insulated gate bipolar transistor (IGBT) and metal-oxide-semiconductor field-effect transistor (MOSFET) to convert electricity (voltage, current) to a desired form (AC/DC, amplitude). When developing the main circuit for power electronics equipment, it is necessary that the completed product satisfy the required specifications, and this requires combining the wiring structure design (required for proper switching), cooling structure design (required for dissipating heat generated due to the conduction losses and switching losses of devices) and EMI design

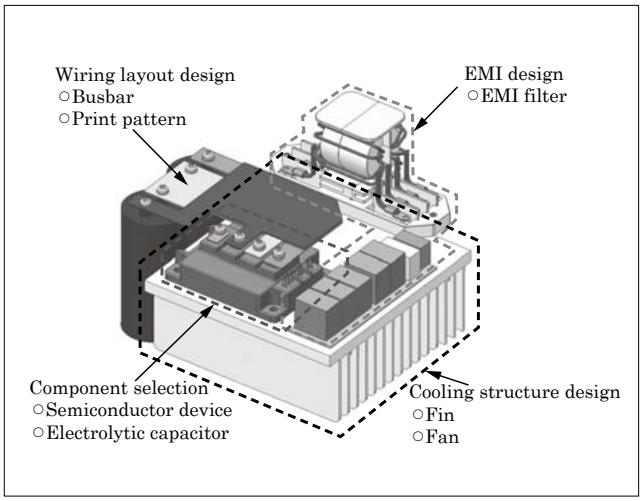

Fig.1 Design elements in the main circuit of power electronics equipment

(required for preventing electromagnetic noise trouble associated with voltage and current fluctuation during high-speed switching).

2.2 Simulation configuration

Fuji Electric utilizes simulations for the 3 types of design elements. The configuration of the device design simulation is shown in Fig. 2. In the conventional simulation shown in Fig. 2 (a), device design is carried out while optimizing each of the elements separately by means of simulations. When doing this, the required switching characteristics (surge voltages, losses) of the power device are obtained through trial manufacturing and experimenting. However, since the elements interact with each other, this affects the characteristics of the elements. As a result, a locally optimized element may not result in an optimized design of the entire equipment. Therefore, the optimization of power electronics equipment required repeated trial manufacturing and evaluation. Repeated trial manufacturing and evaluation not only leads to extended development periods, but also makes it more difficult to satisfy more advanced requirements, especially for elements that greatly depend on the expertise of the developer.

As a result, an equipment design that does not depend on trial manufacturing is needed to be able to analyze the behavior of the entire device during the design stage. This is achieved by means of the configuration shown in Fig. 2 (b), in which development is linked together with the device simulation model. The device simulation model is the focal point of development and it makes it possible to utilize the 3 types of simulations by linking them together. The configuration of this simulation makes it possible to carry out device design without trial manufacturing since actual measurements are not required.

3. Device Simulation Technology

3.1 Analysis of device operating waveform in conventional simulations

In order to achieve the simulation configuration shown in Fig. 2 (b), the development of a high-precision device simulation model is absolutely essential. The technology for analyzing the device operating waveform has been under study for a long time, but in general, it can be broadly divided into 2 different types. However, based on the reason indicated below, it is difficult to apply the technology to the design of power electronics equipment.

One of the types is a technology for performing analysis through the use of a behavior model obtained by fitting the electrical characteristics of the device. This technology is normally implemented in a circuit simulator that is generally used in the waveform analysis. Since there are comparatively few configuration parameters, it can be operated quickly and easily by device design engineers. However, this model is effective only in the limited operating conditions, and, therefore, it is still difficult to obtain an accurate operating waveform in power electronics equipment which is operated under various conditions of the gate driving and temperature.

The other type is a device simulator technology for analyzing the internal state of the spatial distribution of the carrier density and electric field based on the device structure model and semiconductor physical properties in order to obtain the electrical properties. This technology is capable of accurate analysis and is used in device development, but it takes a long time to analyze a single switching waveform. Therefore, it takes too much time to perform the analysis of linkage with the circuit simulator for simulating the behav-

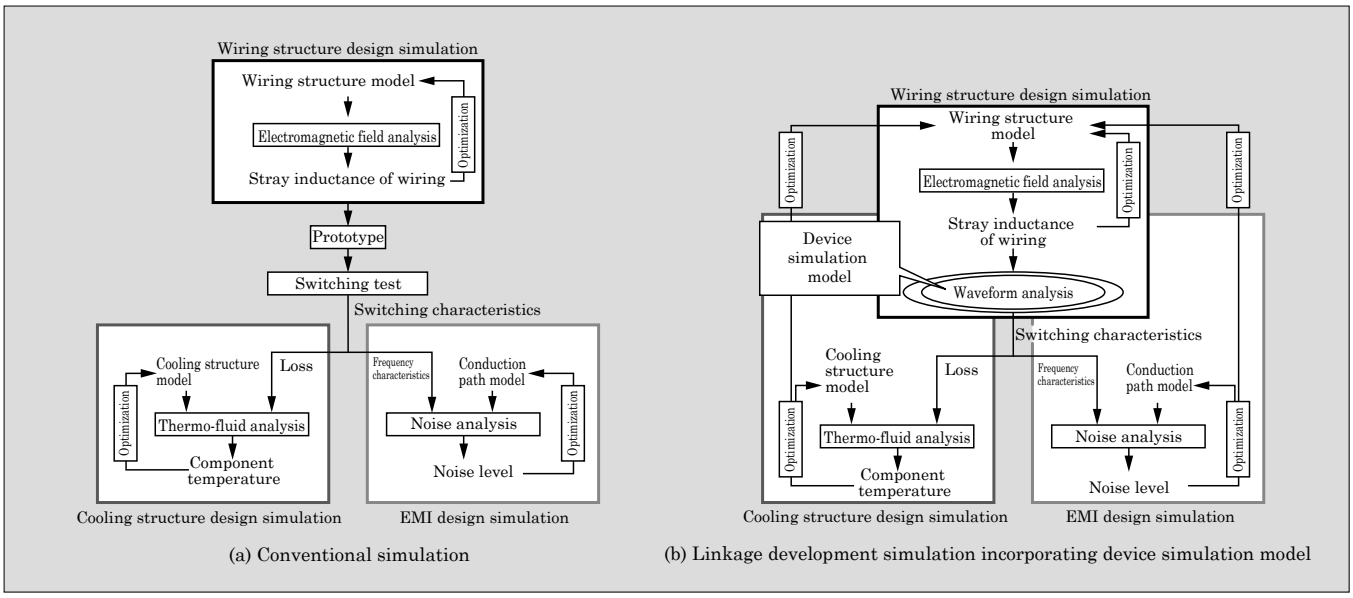

Fig.2 Configuration of device design simulation

ior of power electronics equipment, which carries out switching repeatedly. As a result, it is difficult to apply this technology to the design of power electronics equipment.

3.2 Principles of the device simulation model

Fuji Electric has developed a device simulation model capable of operating in a circuit simulator for performing high-precision analysis under various operating conditions. This model is currently being utilized in the development of power modules.

The developed simulation model is configured with an equivalent circuit model based on semiconductor's internal physical phenomena. Figure 3 shows the equivalent circuit model of the IGBT. The IGBT is indicated by the electrical component symbols as shown in Fig. 3 (a). The equivalent circuit model for the internal structure of the IGBT is configured as shown in Fig. 3 (b) by connecting in series the PiN diode and MOSFET. The capacitors are also connected to each terminal. The current of the PiN diode flows according to the carrier (holes and electrons) concentration distribution gradient and carrier recombination, and the current is calculated by obtaining the diffusion current and the recombination current. Furthermore, since carrier accumulation and delivery occur in the drift layer. The current due to this phenomenon is obtained to calculate the tail current during turn-off period. The current through the MOSFET is calculated based on the conductivity of the channel depend on the gate voltages. In addition, the terminal-to-terminal capacitance is calculated from the device's internal structure and the width of the depletion layer.

By determining the parameters to be used in the equivalent circuit model from the analysis results of the device simulator, it is possible to reproduce the electrical characteristics based on the device characteristics. As a result, it is possible to build a model that matches the actual requirements even when there are

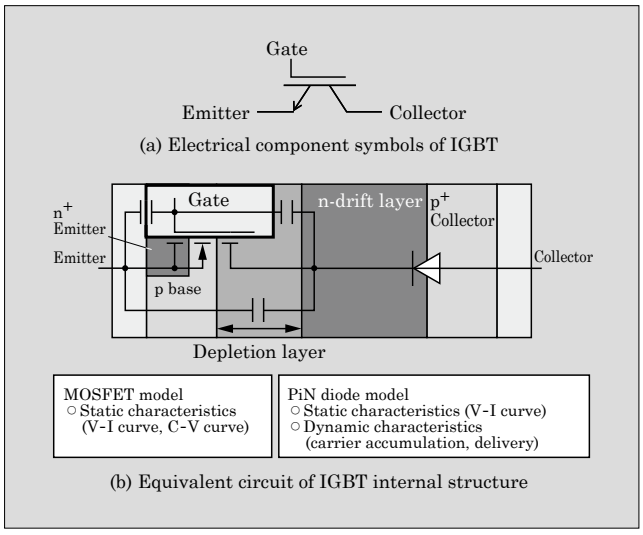

Fig.3 IGBT device equivalent circuit model

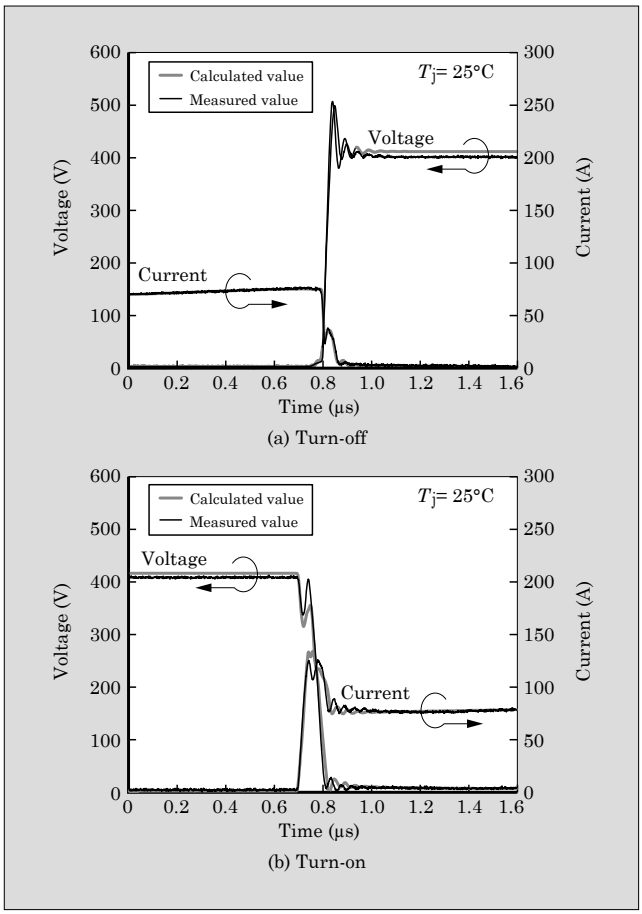

Fig.4 Switching waveform of IGBT

changes in the switching conditions (voltage, current), driving conditions (gate voltage, resistance) and temperature.

Figure 4 shows a comparison of the measured switching waveform and the calculated switching waveform of the device equivalent circuit model for the IGBT (T_j = 25 °C). Error in switching losses (i.e., the error in the calculated values compared with the measured values) is 5.4% at turn-off and 3.3% at turn-on. This indicates that it is possible to implement high-precision analysis. Furthermore, the slope of voltages and currents, as well as their parasitic oscillation match the measured values. The error for peak values is 1.6% for voltage and 6.5% for current. It is indicating that the actual behavior can be simulated with good precision.

3.3 Example of device design via coupled simulation

As mentioned earlier, utilizing a device simulation model makes it possible to analyze the behavior of devices with high precision, enabling device design without having the actual measurements. In this section, we describe an example of using this device simulation model with regard to device selection, wiring structure design, cooling structure design and EMI design.

(1) Device selection and wiring structure design

In order to reduce the generated loss of the device

and increase the efficiency of equipment, it is necessary to utilize the high-speed switching of the device and implement proper device selection and wiring structure design. However, the switching characteristics (e.g. surge voltage and switching losses) for the device type and wiring structure fluctuate in a complex manner, and as a result, the optimal characteristics need to be obtained by changing the conditions and performing evaluation based on detailed experiments.

When the device simulation model is used, these complex fluctuations can be accurately simulated, and device selection and wiring structure design can be implemented without requiring actual-equipment evaluation. The switching waveform when connecting IGBTs in parallel is shown in Fig. 5. The utilized IGBT is the exact same one used in the switching waveform measurements shown in Fig. 4. The impact of the stray inductance of the wiring and current flowing in the device causes the switching waveform to fluctuate in a complex manner, and although switching losses increased by 30% during turn-off, it decreased by 50% during turn-on. By utilizing the device simulation model, switching loss error becomes 0.6% and 2.9% respectively. Furthermore, conventional methods would see an increase in loss of about 40% when conditions change, but the device simulation model improves on this significantly.

(2) Cooling structure design

The cooling structure (fin, fan) is one component that occupies a large area in power electronics equipment. In order to reduce the size of equipment, components need to be arranged in consideration of the heat quantity and air flow of the components; thus one requirement is the development of a more compact cooling structure design capable of high-efficiency cool.

Fuji Electric has utilized thermo-fluid analysis to develop an analysis technique for examining the optimal placement of components. When the arrangement of components is changed, the wiring structure also changes, and as a result, generated loss for the device also fluctuates as explained previously. Traditionally, these changes were incorporated into the design as margin. However, when using the device simulation model and thermo-fluid analysis, accurate analysis can be made of loss and temperature based on component arrangement, thereby enabling a design with very little margin.

In addition, since device loss depends on temperature, the temperature of the device also varies with changes in generated loss based on cooling capacity. In conventional cooling structure design, it was common for analysis to be performed for the generated loss of the device by using the loss of a certain temperature (for example, T_j = 150 °C). However, this approach led

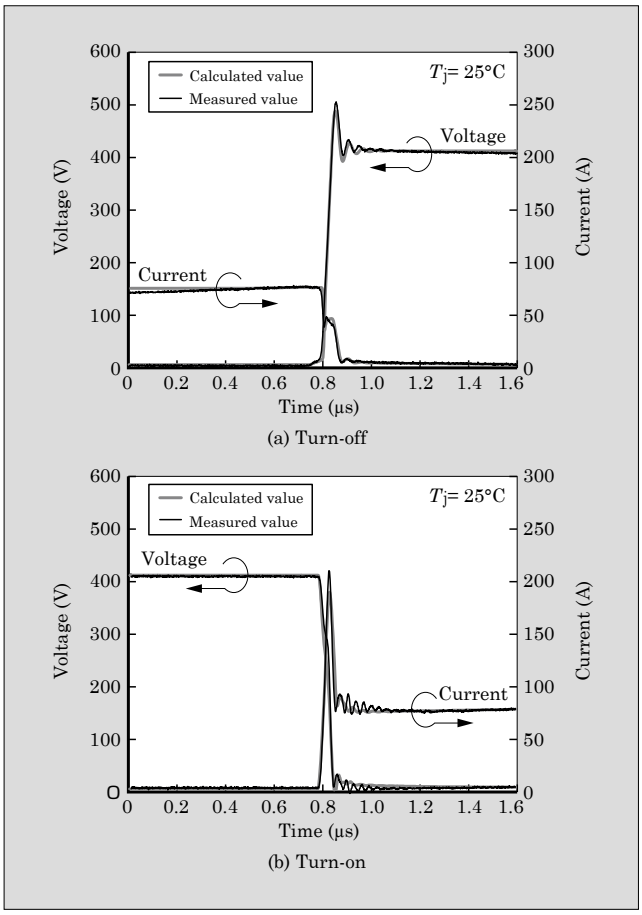

Fig.5 Switching waveform when connecting IGBTs in parallel

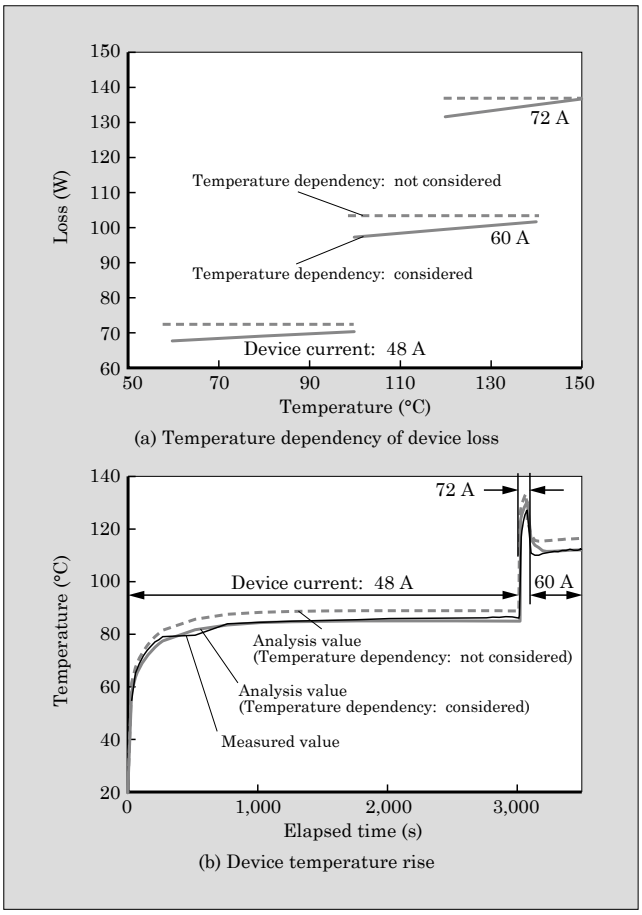

Fig.6 Thermo-fluid analysis considering temperature dependency of device loss

to degradation in precision. Figure 6 shows a thermo-fluid analysis taking into account the temperature dependency of the device loss. Loss tends to increase in proportion to increases in temperature for the temperature dependency of the device loss shown in Fig. 6 (a). The temperature increase of the device when changing the current flowing in the device stepwise from 48 A to 72 A, and then to 60 A is shown in Fig. 6 (b). When consideration is not made for temperature dependency, an error up to 7 °C may exist, but this is improved to 3 °C when temperature dependency was considered. Using the device simulation model in this way makes it possible to perform more precise thermal analysis, and it contributes to reducing the size of the cooling structure, as well as shortening the development period.

(3) EMI design

Sharp changes in the voltage and current in the switching operations of semiconductor devices are a source of noise in power electronics equipment, and electromagnetic noise is emitted through the propagation of parasitic capacitance and space inside the equipment. Suppressing these types of noises through proper EMI design is very important for not only reducing the size of equipment, but also for increasing the reliability.

Fuji Electric has constructed an EMI analysis platform capable of optimizing EMI design before starting trial manufacture for the equipment. By utilizing electromagnetic field analysis, it is possible to implement noise conduction path modeling and estimate the noise components emitted from the equipment. Traditional EMI analysis utilizes the maximum value of each frequency component derived from the observed waveform, and then estimates the noise components to be emitted.

By incorporating a physical model for the device into the platform, it becomes possible to carry out high-precision estimations before starting trial manufacture for the equipment. The amount of noise emission is regulated for each frequency component. EMI design can be performed with even greater precision if accurate estimation can be made of the frequency components of the noise producing switching waveform.

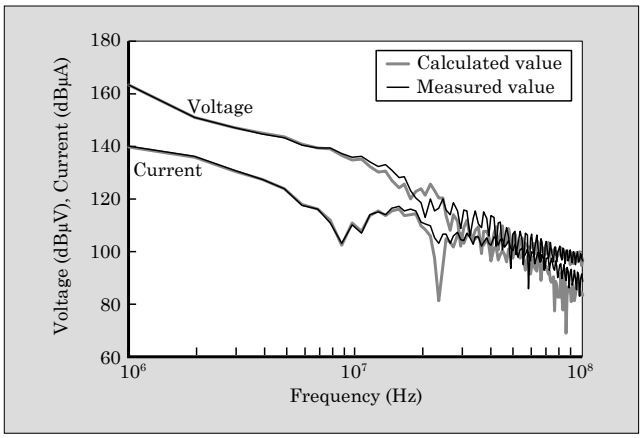

Fig.7 Frequency characteristics of switching waveform during turn-off

Figure 7 shows the frequency characteristics of the switching waveform during turn-off shown in Fig. 4(a). The frequency components for the measured values and calculated results show good agreement, and it is anticipated that high-precision EMI design will be implemented without manufacturing equipment and taking measurements.

4. Postscript

By utilizing a high-precision device simulation model for power electronics equipment design, we have shown that it is possible to perform high-precision design without the need of creating prototypes.

In the future, we plan to simplify the linkage work required for each simulation tool and establish an equipment design technology for optimizing the design of equipment while shortening the development time.

Supplemental Explanation

Supplemental explanation 1 Functional Safety

p.6

In contrast to intrinsic safety, which refers to ensuring safety by eliminating the risk factors themselves such as the shape and structure, functional safety ensures "normal operation of functions" of devices including computers. It means making full use of various functions to realize safety.

The IEC establishes safety standards for specific product groups based on the IEC Guide 104 for developing basic safety publications and IEC 61508 specifies functional safety of electrical, electronic and programmable electronic systems such as power electronics devices.

Supplemental explanation 2 Power Device Drive Conditions

p.7

In the insulated gate bipolar transistor (IGBT) circuit in Fig. 1, turning off the IGBT (gate off) while the current is flowing causes the current to decrease to zero, and the V_{CE}, voltage between the IGBT collector and the emitter, increases from almost zero to the circuit voltage. At this time, as shown in Fig. 2, the voltage jumps up mainly due to the influence of the parasitic impedance existing in the circuit. Since the increase of V_{CE} exceeding the rating of the device may lead to a device breakdown, it is necessary to suppress this voltage jump by providing a snubber circuit in parallel with the device or decreasing the parasitic impedance through optimizing the physical structure of the circuit.

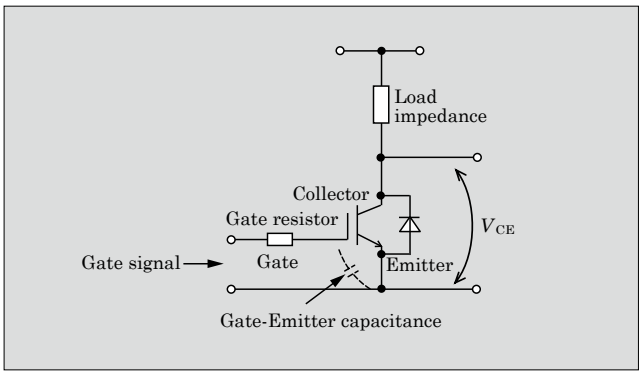

Fig.1 IGBT circuit

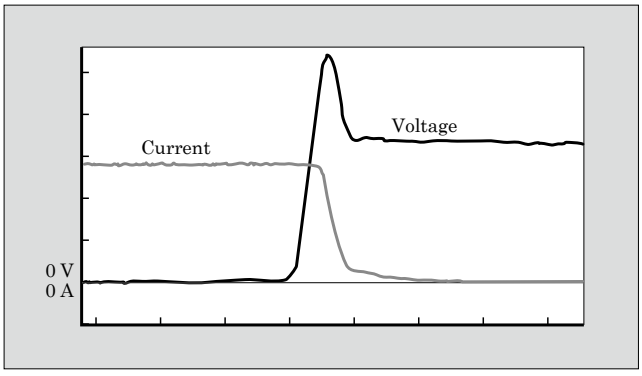

Fig.2 Waveform of IGBT turned off

The switching speed of an IGBT is generally controlled by managing the voltage change speed of a gate drive signal (voltage) when the voltage charges and discharges the electrostatic capacitance between the emitter and gate through adjusting the ohmic value of the gate resistor connected in series to the gate terminal. In general, increasing the switching speed allows the switching loss to be decreased but electromagnetic radiation of electromagnetic compatibility (EMC) may increase due to the increase of the current and voltage change rates, which is a point that requires attention.

If the IGBT is turned on while a current is flowing through the free wheeling diode (FWD) on the opposing arm as shown in Fig. 3, the current transitions from the FWD on the opposing arm to the IGBT switched on and, at the same time, the terminal voltage of the FWD on the opposing arm increases (reverse recovery). A high rate of this voltage change dV/dt may cause FWD breakdown.

For using an IGBT, these phenomena must be taken into account to specify the optimum drive conditions.

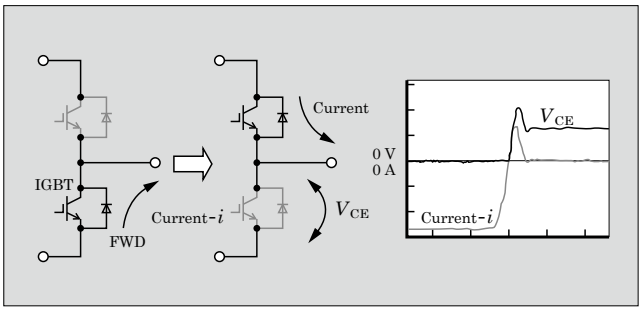

Fig.3 FWD reverse recovery operation

Supplemental Explanation

Supplemental explanation 3 Power Device Generated Loss

p.7

It is represented by the sum of the conduction and switching losses (see Fig. 1). Conduction loss is generated by the current flowing across the potential difference at the junction (p-n junction) of a semiconductor and represented by the product of the potential difference and the current. Switching loss is generated by the product of the current and the voltage between terminals of a power device in a transient state during switching, and loss per switching cycle is represented by the time integral of the voltage-current product.

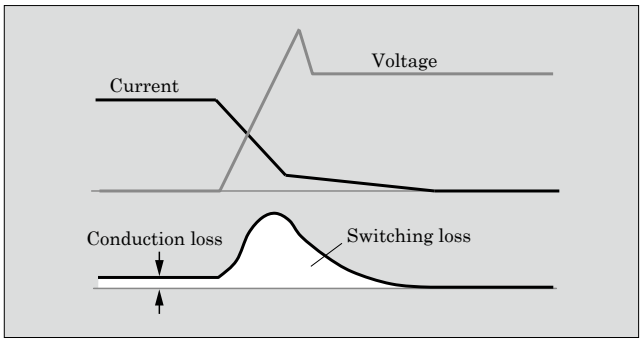

Fig.1 Switching waveform and switching loss of IGBT turned off

Supplemental explanation 4 IP

p.8, 33

IP stands for International Protection. Combinations of the 2 digits that follow IP define the types and levels of protection. IEC 60529 Degrees of protection provided by enclosures (IP Code) defines as follows.

IP □□
- First digit: Indicates the level of protection against ingress of solid foreign objects
- Second digit: Indicates the level of protection against ingress of water

Of the first digit numbers, 1 and 2 assume hands and fingers and are also intended for body part protection.

Table 1 Protection rating codes and definitions

	1st digit	2nd digit
0	No protection	No protection
1	No ingress of solid objects of 50 mm or larger in diameter shall occur (the back of a hand is assumed).	Dripping water (vertically falling drops) shall have no harmful effect.
2	No ingress of solid objects of 12.5 mm or larger in diameter shall occur (human fingers are assumed).	Vertically dripping water shall have no harmful effect when the enclosure is tilted at an angle up to 15° from the vertical.
3	No ingress of solid objects of 2.5 mm or larger in diameter shall occur.	Water falling as a spray at any angle up to 60° from the vertical shall have no harmful effect.
4	No ingress of solid objects of 1.0 mm or larger in diameter shall occur.	Water splashing against the enclosure from any direction shall have no harmful effect.
5	Dust must not enter in sufficient quantity to interfere with satisfactory operation.	Water projected by a nozzle against the enclosure from any direction shall have no harmful effect.
6	No ingress of dust shall occur.	Water projected in powerful jets against the enclosure from any direction shall have no harmful effect.
7	–	Ingress of water in a harmful quantity shall not be possible when the enclosure is temporarily immersed in water.
8	–	Ingress of water in a harmful quantity shall not be possible when the enclosure is continuously immersed in water.

Supplemental Explanation

Supplemental explanation 5 SIL

p.8

SIL stands for Safety Integrity Level. It indicates the level of reliability required for safety functions of the system concerned. The reliability levels required for safety functions are classified into 4 levels from the lowest SIL 1 to the highest SIL 4. IEC 61508-1 defines as shown in Table 1 for low-demand operation and high-demand or continuous operation respectively.

Table 1 Definitions of safety integrity levels

SIL	Low-demand operation*1
4	10^{-5} or higher, lower than 10^{-4}
3	10^{-4} or higher, lower than 10^{-3}
2	10^{-3} or higher, lower than 10^{-2}
1	10^{-2} or higher, lower than 10^{-1}

SIL	High-demand operation or continuous mode*2
4	10^{-9} or higher, lower than 10^{-8}
3	10^{-8} or higher, lower than 10^{-7}
2	10^{-7} or higher, lower than 10^{-6}
1	10^{-6} or higher, lower than 10^{-5}

*1: Represents the average probability of failing to achieve the required function.
*2: Represents the probability of hazardous failure per unit time.

Supplemental Explanation

Supplemental explanation 6 3-Level Power Conversion

p.9, 20

3-level power conversion method is explained using inverters as an example in follows.

The 3-level power conversion system (3-level inverter) has a lot of advantages compared to 2-level power conversion system (2-level inverter).

As shown in the Fig. 1 below, the voltage waveform at the conversion output of the 2-level inverter is $\pm E_d$ pulse width modulated (PWM) pulses centered about the zero point. However, the 3-level inverter is PWM pulses of $\pm E_d/2$ and $\pm E_d$ centered about the zero point. Because the output waveform of the 3-level inverter more closely resembles a sine wave, the size of the LC filter used to convert the output waveform into a sine wave can be reduced. The width of voltage fluctuation per one-time switch operation is half that of the 2-level inverter. Therefore, the switching loss occurring in a switch device is roughly halved that of the 2-level inverter and the electromagnetic noise generated by the equipment can also be reduced. The 3-level inverter having these characteristics can be effective for realizing smaller size and higher efficiency of a system.

Among the 3-level inverters, the method shown in the Figure in which an inverter is wired to the intermediate potential (N) of the DC power source, is known as the neutral-point-clamped (NPC) system. The naming of this method originates from the fact that the voltage applied to the switching device is always clamped to half the DC voltage E_d.

Compared to the NPC system, the advanced T-type-NPC (AT-NPC) system enables a simpler circuit configuration because of the following reasons; the series-connected insulated gate bipolar transistors (IGBTs) have twice the rated voltage as the IGBTs which are used with the NPC system, an reverse blocking IGBT (RB-IGBT) is used between the intermediate potential point (N) of the DC power source and an intermediate point (U) of the series-connected IGBTs. Because of having fewer devices on the current routes, the AT-NPC system has the advantages of realizing lower power dissipation, and the fewer number of power supplies for the gate driving circuit.

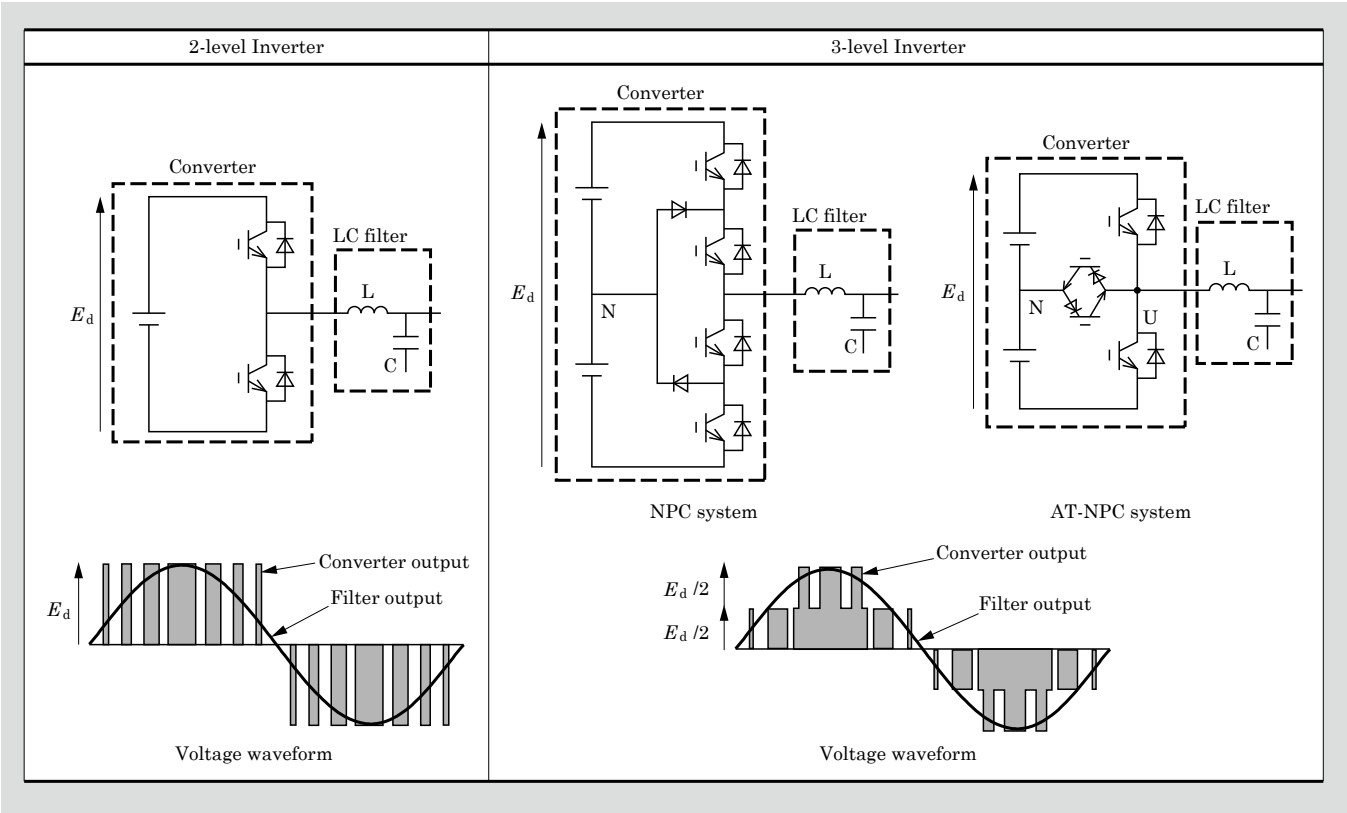

Fig.1 Comparison of 2-level inverter and 3-level inverter circuits and voltage waveforms

High-Performance Compact Inverter “FRENIC-Ace”

SHINODA, Seiji*

General-purpose inverters have become widely popular for driving and controlling the motors of plant facilities and processing machinery, while also facilitating improvements in the performance and energy savings of machinery. In recent years, there has been increasing demand for dedicated equipment that optimizes control based on industry and machinery needs. As a result of the sharp increase in energy consumption in developing countries in particular, there has been increasing interest in energy efficiency.

The high-performance compact inverter “FRENIC-Ace” is compatible with the drive of large synchronous motors, which are energy-efficient. Furthermore, although it is a general-purpose inverter, it has customizable logic functions, and it can precisely meet the requirements of specific purposes without combining a programmable controller (PLC) or external control equipment. This general-purpose inverter can be applied to specific applications as well as energy-saving applications.

1. Features

The FRENIC-Ace (see Fig. 1) has the following key features.

(1) Expanded robust customizable logic functions as standard feature

Input power source	Capacity	Variety
1-phase 200-V rating	0.1 to 2.2 kW	Standard type, Built-in EMC filter type
3-phase 200-V rating	0.1 to 22 kW	
3-phase 400-V rating	0.4 to 220 kW	

Fig.1 “FRENIC-Ace”

The FRENIC-Ace comes standard with a greatly expanded set of customizable logic functions, which were originally part of the “FRENIC-MEGA” and “FRENIC-HVAC” models. Traditionally, the specialized functions requested by users were implemented by utilizing external control devices or specialized software that was the improved software functionality of the inverter unit. When using the FRENIC-Ace, users can achieve specialized functions by using a standard specification inverter alone with the customizable logic functions (see Fig. 2). Users can write the software program by themselves.

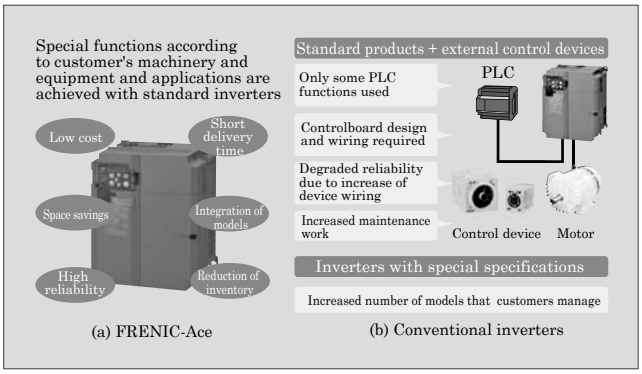

Fig.2 Features of “FRENIC-Ace”

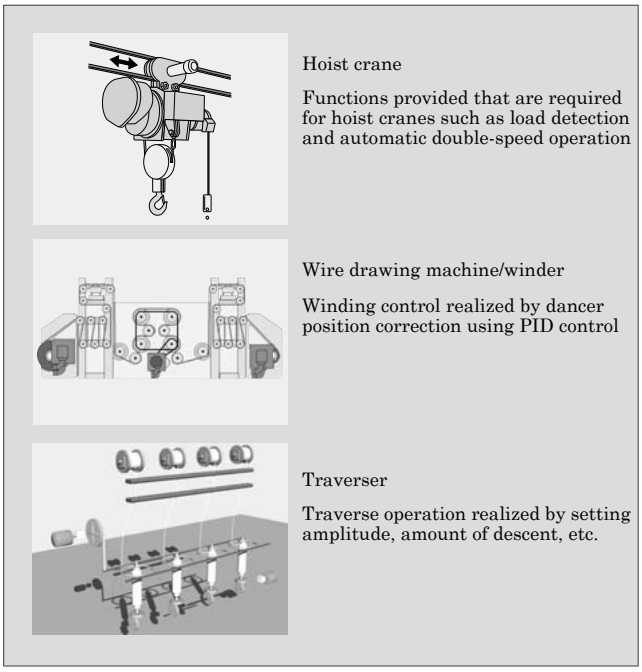

Fig.3 Examples of application of customized logic function

* Power Electronics Business Group, Fuji Electric Co., Ltd.

Figure 3 shows the Application examples of the customizable logic functions. In hoist cranes that use a motor to hoist up heavy loads from the ceiling, rotating speed is adjusted depending on hoisting load. Moreover, mechanical brake operation for drop prevention and motor drive are controlled in cooperation There is also torque and speed control used in wire drawing machines and winding machines, as well as the reciprocating motion of traversers. With the FRENIC-Ace, such advanced control can be performed by the inverter unit alone.

(2) 4 types of overload capacities

The FRENIC-Ace Series offers 2 options for "overload capacity" types, a heavy overload capacity (HHD rating) and light overload capacity (HND rating), selectable according to the machines and devices used. It also offers 2 types of "temperature ratings," 40 °C and 50 °C, as the upper limit of ambient temperature at an inverter installation location. This has made it possible for one model to support a total of 4 types of ratings (see Fig. 4).

The heavy overload capacity rating is suitable for up-down conveyors that repeatedly start up and stop at high frequencies in multilevel warehouses and stirrers for viscous materials and crushers in food processing machines and material processing. The light overload capacity rating is suitable for fans, pumps, centrifuges, conveyors, which are applications of moderate acceleration/deceleration and continuous rotation and do not require much overload capability. With the light overload capacity rating, it is possible to adopt inverters with one level smaller capacity than motors with a heavy overload capacity rating to provide the same output. In an environment with an ambient temperature of 40 °C, an inverter with a smaller capacity by 2 levels (ND rating) can be adopted. This makes it easier to use the inverters in fan and pump applications and utility applications having large global markets.

(3) Industry's smallest class

The FRENIC-Ace has achieved the industry's smallest class. For capacities less than 0.75 kW in the 200 V series, its width is 15% less than the previous "FRENIC-Multi" model. In particular, when multiple units are used, the effect of reducing the occupancy of the panel surface makes it possible to greatly reduce the size of controlboards and equipment (see Fig. 5).

(4) Compatible with the sensorless drive system of synchronous motors

The inverter is compatible with the sensorless drive system of synchronous motors as a standard feature. It can, therefore, be adopted for applications that require even greater energy savings.

(5) Compliance with international standards

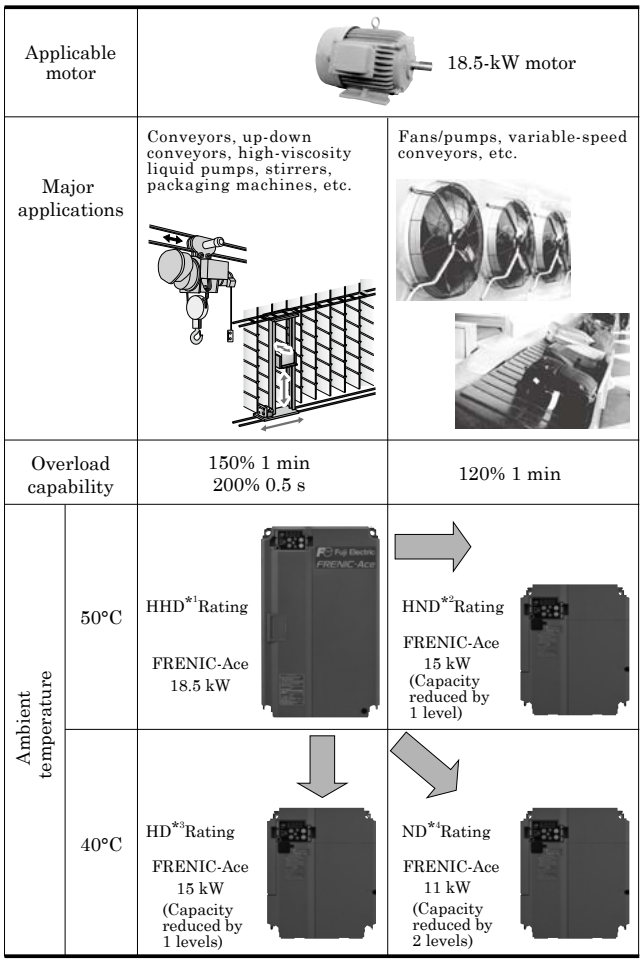

*1 HHD: High carrier frequency heady duty
*2 HND: High carrier frequency normal duty
*3 HD: Heavy duty
*4 ND: Normal duty

Fig.4 4 types of overload capacity

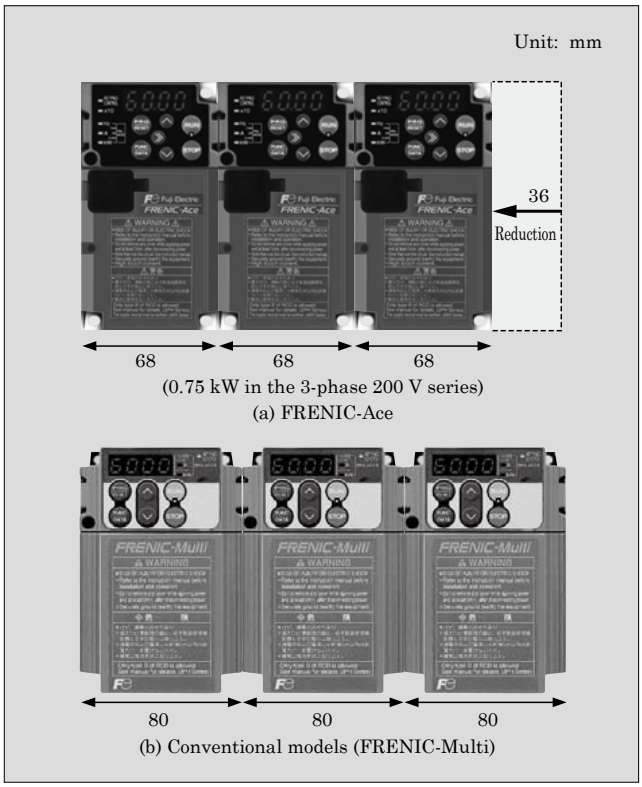

Fig.5 Width of "FRENIC-Ace"

Table 1 Option cards

PROFIBUS-DP*1	EtherNET/IP*2
PROFINET-RT*3	CANopen*4
DeviceNet*5	CC-Link*6
Digital input/output expansion	Analog input/output expansion
Motor sensor (PG) input	RS-485 multi-drop

*1: PROFIBUS-DP is a trademark or registered trademark of the PROFIBUS User Organization.
*2: EtherNET/IP is a trademark or registered trademark of Open DeviceNet Vendor Association, Inc. (ODVA).
*3: PROFINET-RT is a trademark or registered trademark of PROFIBUS User Organization.
*4: CANopen is a trademark or registered trademark of CAN in Automation.
*5: DeviceNet is a trademark or registered trademark of Open DeviceNet Vendor Association, Inc. (ODVA).
*6: CC-Link is a trademark or registered trademark of the CC-Link Association.

Inverters are exported as components of machine equipment and, therefore, must comply with international standards. The inverter unit for the FRENIC-Ace is compliant with the functional safety standard, IEC 61800-5-2/61508 (STO), and unlike previous products, it does not require a redundant main circuit cut-off circuit (for example, 2 magnet contactors). It is also compliant with the UL/cUL and CE Mark as standard.

(6) Scalable option cards

As listed in Table 1, the inverter has been provided with a variety of option cards compatible with control input/output expansion, various types of communication. Despite compactness, the unit is capable of mounting 2 types of option cards, which include a type for replacing the control terminal block substrate and a type for mounting the substrate as add-on. This allows It to support the simultaneous implementation of communication based control from the host controller, feedback control utilizing a motor side sensor and master-slave synchronous operation.

2. Applied Technologies

(1) Customizable logic functions

The customizable logic functions of the FRENIC-Ace can be used for reading inverter configuration parameters and monitoring data and writing user parameters. When connected to a host controller, customized data is shared with each inverter, making it possible to carry out linked operation. We have also developed dedicated programming and debugging tools to enable users to easily implement large-scale programs of up to 200 steps. By using these tools to arrange and connect prepared functional blocks on a PC screen, it is easy to carry out programming (see Fig. 6). There are 55 logic symbol types that include both digital and analog operations, such as a logic operation, counter, timer, arithmetic operation, comparator, limiter, selector and hold. There are also 2 debugging modes, which include online monitoring of the input and output of each functional block, as well as waveform tracing.

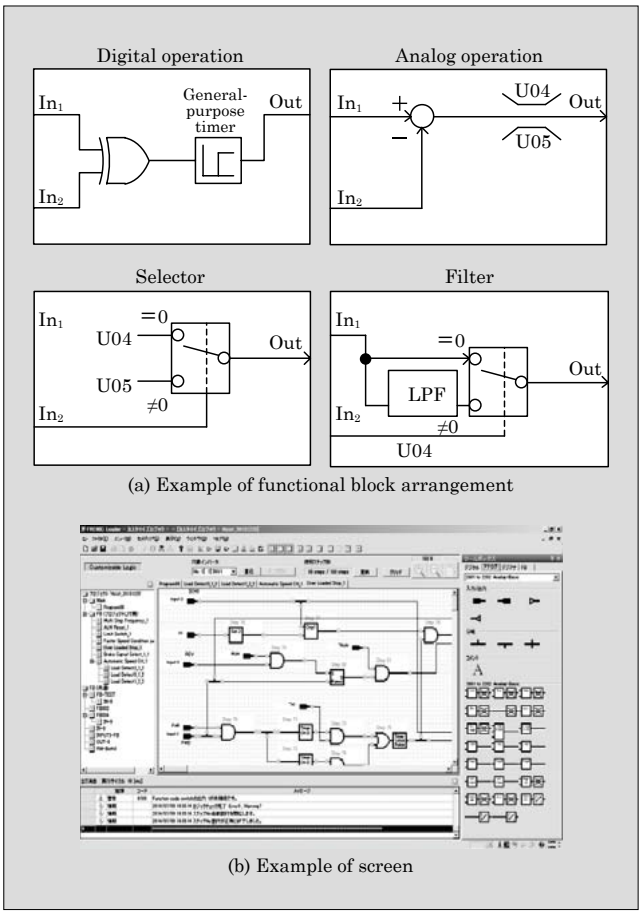

Fig.6 Programming and debugging tools

(2) Functional safety measures

We have developed a unique circuit system and diagnostic algorithms to help facilitate the compactness of safety related circuits, as well as improve mean time between failures (MTBF) and the failure detection rate. This is the first compact-class product to comply with Cat.3/PL:e, SIL3, and it enables users to easily construct higher level safety systems.

(3) Standardization of options

Conventionally, options have been prepared for each individual model, but standardization has been made for the interface of the inverter unit, allowing users to reduce a variety of purchases and maintenance related items. For example, communication options such as DeviceNet and PROFIBUS-DP can be shared with the FRENIC-HVAC and other models.

Product Inquiries

Business Planning Department, Drive Division,
Power Electronics Business Group,
Fuji Electric Co., Ltd.
Phone: +81-3-5435-7190

Fuji Electric

FRENIC-AQUA

Dedicated to water and pump applications:
The *book type inverter* by Fuji Electric

Fuji Electric
5 Year Warranty

- 0.75 kW to 710 kW
- IP21 & IP55, DCR up to 90 kW
- Built-in EMC filter for all capacities
- 4 PID sets
- New engergy saving functions
- User-friendly display
- Customizable logic (mini PLC)
- ...and many more features!

Fuji Electric
Innovating Energy Technology

Fuji Electric Europe GmbH · www.fujielectric-europe.com · info.inverter@fujielectric-europe.com

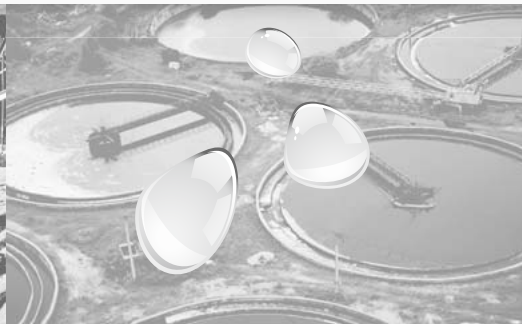

Innovating Energy Technology

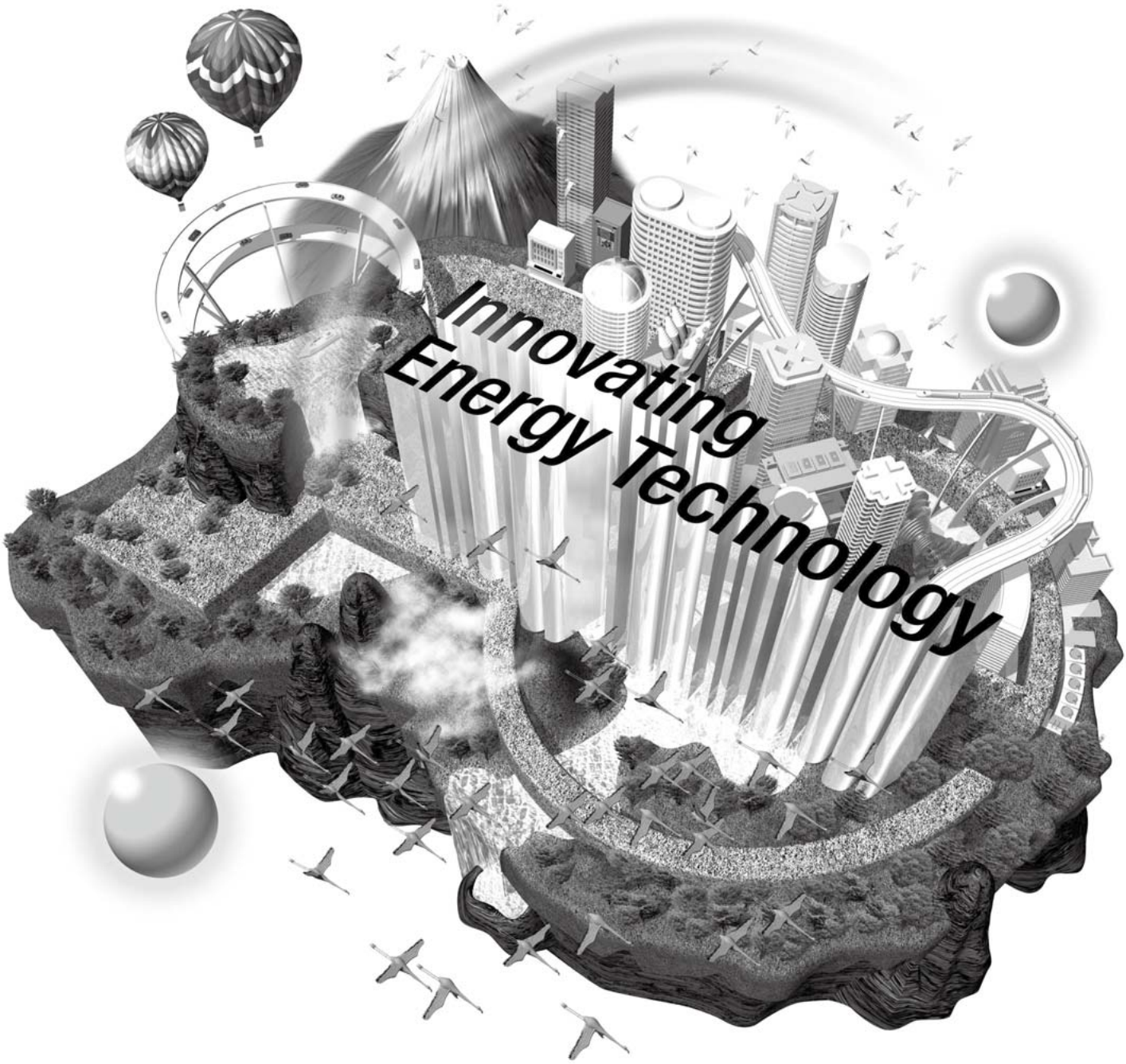

Through our pursuit of innovation in electric and thermal energy technology, we develop products that maximize energy efficiency and lead to a responsible and sustainable society.

Fuji Electric

Overseas Subsidiaries

* Non-consolidated subsidiaries

America

Fuji Electric Corp. of America
Sales of electrical machinery and equipment, semiconductor devices, drive control equipment, and devices
Tel +1-732-560-9410
URL http://www.americas.fujielectric.com/

Fuji Electric Brazil-Equipamentos de Energia Ltda *
Sales of inverters, semiconductors, and power distribution
Tel +55-11-2283-5991
URL http://www.americas.fujielectric.com/portugues

Asia

Fuji Electric Asia Pacific Pte. Ltd.
Sales of electrical distribution and control equipment, drive control equipment, and semiconductor devices
Tel +65-6533-0014
URL http://www.sg.fujielectric.com/

Fuji SMBE Pte. Ltd. *
Manufacture, sales, and services relating to low-voltage power distribution board(switchgear, control equipment)
Tel +65-6756-0988
URL http://smbe.fujielectric.com/

Fuji Electric (Thailand) Co., Ltd. *
Sales and engineering of electric substation equipment, control panels, and other electric equipment
Tel +66-2-210-0615

Fuji Electric Manufacturing (Thailand) Co., Ltd.
Manufacture and sales of inverters (LV/MV), power systems (UPS, PCS, switching power supply systems), electric substation equipment (GIS) and vending machines
Tel +66-2-5292178

Fuji Tusco Co., Ltd. *
Manufacture and sales of and provision of maintenance services for transformers
Tel +66-2324-0100
URL http://www.ftu.fujielectric.com/

Fuji Electric Vietnam Co.,Ltd. *
Sales of electrical distribution and control equipment and drive control equipment
Tel +84-4-3935-1593

Fuji Furukawa E&C (Vietnam) Co., Ltd. *
Engineering and construction of mechanics and electrical works
Tel +84-4-3755-5067

PT. Fuji Electric Indonesia *
Sales of inverters, servos, UPS, tools, and other component products
Tel +62 21 398-43211

Fuji Electric India Pvt. Ltd. *
Sales of drive control equipment and semiconductor devices
Tel +91-22-4010 4870
URL http://www.fujielectric.co.in

Fuji Electric Philippines, Inc.
Manufacture of semiconductor devices
Tel +63-2-844-6183

Fuji Electric Semiconductor (Malaysia) Sdn. Bhd.
Manufacture of semiconductor devices
Tel +60-4-494-5800
URL http://www.fujielectric.com.my/

Fuji Electric (Malaysia) Sdn. Bhd.
Manufacture of magnetic disk and aluminum substrate for magnetic disk
Tel +60-4-403-1111
URL http://www.fujielectric.com.my/

Fuji Furukawa E&C (Malaysia) Sdn. Bhd. *
Engineering and construction of mechanics and electrical works
Tel +60-3-4297-5322

Fuji Electric Taiwan Co., Ltd.
Sales of semiconductor devices, electrical distribution and control equipment, and drive control equipment
Tel +886-2-2511-1820

Fuji Electric Korea Co., Ltd.
Sales of power distribution and control equipment, drive control equipment, rotators, high-voltage inverters, electronic control panels, medium- and large-sized UPS, and measurement equipment
Tel +82-2-780-5011
URL http://www.fujielectric.co.kr/

Fuji Electric Co.,Ltd. (Middle East Branch Office)
Promotion of electrical products for the electrical utilities and the industrial plants
Tel +973-17 564 569

Fuji Electric Co., Ltd. (Myanmar Branch Office)
Providing research, feasibility studies, Liaison services
Tel +95-1-382714

Representative office of Fujielectric Co., Ltd. (Cambodia)
Providing research, feasibility studies, Liaison services
Tel +855-(0)23-964-070

Europe

Fuji Electric Europe GmbH
Sales of electrical/electronic machinery and components
Tel +49-69-6690290
URL http://www.fujielectric-europe.com/

Fuji Electric France S.A.S
Manufacture and sales of measurement and control devices
Tel +33-4-73-98-26-98
URL http://www.fujielectric.fr/

China

Fuji Electric (China) Co., Ltd.
Sales of locally manufactured or imported products in China, and export of locally manufactured products
Tel +86-21-5496-1177
URL http://www.fujielectric.com.cn/

Shanghai Fuji Electric Switchgear Co., Ltd.
Manufacture and sales of switching equipment, monitoring control appliances, and related facilities and products
Tel +86-21-5718-1234
URL http://www.fujielectric.com.cn/sfswgr/

Shanghai Fuji Electric Transformer Co., Ltd.
Manufacture and sales of molded case transformers
Tel +86-21-5718-7705
URL http://www.fujielectric.com.cn/sfswgr/

Wuxi Fuji Electric FA Co., Ltd.
Manufacture and sales of low/high-voltage inverters, temperature controllers, gas analyzers, and UPS
Tel +86-510-8815-2088

Fuji Electric (Changshu) Co., Ltd.
Manufacture and sales of electromagnetic contactors and thermal relays
Tel +86-512-5284-5642
URL http://www.csfe.com.cn/

Fuji Electric (Zhuhai) Co., Ltd.
Manufacture and sales of industrial electric heating devices
Tel +86-756-7267-861
http://www.fujielectric.com.cn/fez/

Fuji Electric (Shenzhen) Co., Ltd.
Manufacture and sales of photoconductors, semiconductor devices and currency handling equipment
Tel +86-755-2734-2910
URL http://www.szfujielectric.com.cn/FUJIWebSite/index.html

Fuji Electric Dalian Co., Ltd.
Manufacture of low-voltage circuit breakers
Tel +86-411-8762-2000

Fuji Electric Motor (Dalian) Co., Ltd.
Manufacture of industrial motors
Tel +86-411-8763-6555

Dailan Fuji Bingshan Vending Machine Co.,Ltd.
Development, manufacture, sales, servicing, overhauling, and installation of vending machines, and related consulting
Tel +86-411-8754-5798
http://www.fushibingshan.com/index.html

Fuji Electric (Hangzhou) Software Co., Ltd.
Development of vending machine-related control software and development of management software
Tel +86-571-8821-1661
URL http://www.fujielectric.com.cn/fhs/cn/

Zhejiang Innovation Fuji Technology Co., Ltd. *
Design, development, and services pertaining to software
Tel +86-571-8827-0011
URL http://www.fujielectric.com.cn/sif/

Fuji Electric FA (Asia) Co., Ltd.
Sales of electrical distribution and control equipments
Tel +852-2311-8282
URL http://www.fea.hk/

Fuji Electric Hong Kong Co., Ltd.
Sales of semiconductor devices and photoconductors
Tel +852-2664-8699
URL http://www.szfujielectric.com.cn/hkeng/company/index.htm

Hoei Hong Kong Co., Ltd.
Sales of electrical/electronic components
Tel +852-2369-8186
URL http://www.hoei.com.hk/

Innovating Energy Technology

Through our pursuit of innovation in electric and thermal energy technology, we develop products that maximize energy efficiency and lead to a responsible and sustainable society.

Corrosion Resistant, Material, and Hot Water Utilization Technology

Geothermal Power Plants

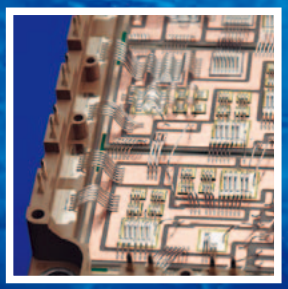

Device Technology

Power Devices (IGBT)

Power Electronics Technology

Power Conditioning Systems (PCS) for Megasolar Plants

Power Electronics Technology

Inverters

Power Electronics Technology

Uninterruptible Power Supply Systems (UPS)

Heat Excange and Refrigerant Control Technology

Hybrid Heat Pump Vending Machines

Fuji Electric

Printed on recycled paper