Fuji Electric

FCX-AII

LEVEL TRANSMITTER

DATA SHEET

FKE···F

The FCX-AII level transmitter accurately measures liquid level and transmits a proportional 4 to 20 mA signal. The transmitter utilizes a unique micromachined capacitance silicon sensor with state-of-the-art microprocessor technology to provide exceptional performance and functionality.

FEATURES

1. High accuracy

0.165% accuracy for all calibrated spans is a standard feature. The micro-capacitance silicon sensor assures this accuracy for all elevated or suppressed calibration ranges without additional adjustment.

0.1% accuracy is available as option

2. Minimum inventory and design

Electronics unit, local indicators and electronics housing are interchageable among all FCX-AII transmitters.

3. Minimum environmental influence

The "Advanced Floating Cell" design which protects the pressure sensor against changes in temperature, static pressure, and overpressure substantially reduces total measurement error in actual field applications.

4. Fuji/HART® bilingual communications protocol

FCX-AII series transmitter offers bilingual communications to speak both Fuji proprietary protocol and HART®. Any HART® compatible devices can communicate with FCX-AII.

5. Application flexibility

Various options that render the FCX-AII suitable for almost any process applications include:

– Full range of hazardous area approvals
– Built-in RFI filter and lightning arrester
– 5-digit LCD meter with engineering unit
– Stainless steel electronics housing
– Wide selection of materials

6. Programmable output Linearization Function

Output signal can be freely programmable.
(Up to 14 compensated points at approximation.)

7. Burnout current flexibility (Under Scale: 3.2 to 4.0 mA, Over Scale: 20.0 to 22.5 mA)

Burnout signal level is adjustable using Model FXW or Hand Held Communicator (HHC) to comply with NAMUR NE43.

8. Dry calibration without reference pressure

Thanks to the best combination of unique construction of mechanical parts (Sensor unit) and high performance electronics circuit (Electronics unit), reliability of dry calibration without reference pressure is at equal level as wet calibration.

SPECIFICATIONS

Functional specifications

Type:

FKE : Smart, 4-20 mA DC + Fuji/Hart® digital signal

Service :

Liquid, gas or vapour.

Static pressure, span, and range limit:

Type	Static pressure	Span limit (mmH_2O)		Range limit (mmH_2O)
		Min.	Max.	
FKE□□2	Up to flange rating	10	600	± 600
FKE□□3		32	3200	± 3200
FKE□□5		130	13000	± 13000
FKE□□6		500	50000	± 50000
FKE□□8		3000	300000	±300000

Remark:

To minimize environmental influence, span should be greater than 1/40 of the max. span in most applications.

Lower limit of static pressure (vacuum limit) ;

Silicone fill sensor: See Fig.1
Fluorinated fill sensor: 66 kPa abs (500 mmHg abs) at temperature below 60 °C. See fig.2

Overrange limit:

To maximum static pressure limit

Output signal:

4 to 20 mA DC with digital signal superimposed on the analogic signal

Power supply:

Transmitter operates on 10.5 V to 45 V DC at transmitter terminals.

10.5 V to 32 V DC for the units with optional arrester.

Load limitations: see figure below

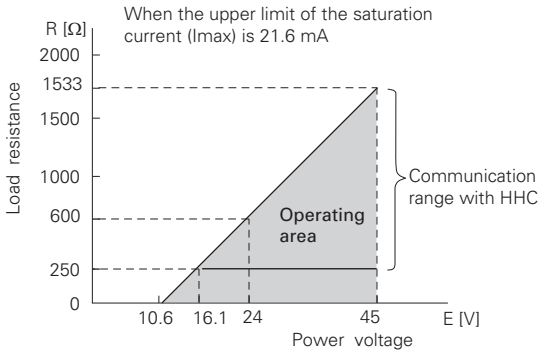

Note) The load resistance varies with the upper limit of the saturation current [I max]

$$R\,[\Omega] = \frac{E\,[V] - 10.5}{(I\,max\,[mA] + 0.9) \times 10^{-3}}$$

Note: For communication with HHC(1), min. of 250Ω required.

Hazardous locations: See below

Authority (Digit 10 =)	Intrinsic safety
ATEX (K)	Ex II 1 G Ex ia IIC T5 (-40°C ≤ Ta ≤ +50 °C) Ex ia IIC T4 (-40°C ≤ Ta ≤ +70 °C) IP66/67 Entity Parameters: Ui ≤ 28 Vdc, Ii ≤ 94.3 mA, Pi ≤ 0.66 W Ci = 36 nF/26 nF for models with/without Arrester Li = 0.7 mH/0.6 mH for models with/without Analog Indicator
Factory Mutual (H)	Class I II III Div.1 Groups A, B, C, D, E, F, G T4 Entity Type 4X Model code: 9th digit / 13th digit; Tamb A,B,C,D,J / Y,G,N / -40°C to +85°C L,P,M,1,2,3 / Y,G,N / -20°C to +80°C Q,S,N,4,5,6 / Y,G,N / -20°C to +60°C E,F,G,H,K / Y,G,N / -40°C to +60°C - / W,A,D / -10°C to +60°C Entity Parameters: Vmax=42.4V, Imax=113mA, Pi=1W, Ci=35.98nF, Li=0.694mH
CSA (J)	Ex ia Class I, Groups A, B, C and D; Class II, Groups E,F and G; Class III Per drawing TC 522873 Temp. code T5 for Tamb max = +50°C Temp. code T4 for Tamb max = +70°C Entity Parameters: Vmax = 28 Vdc, Imax = 94.3 mA, Pmax = 0.66 W Ci = 36 nF/25 nF for models with/without Arrester Li = 0.7 mH/0.6 mH for models with/without Analog Indicator
IECEx (T)	Ex ia IIC T5 (-40°C ≤ Ta ≤+50 °C) Ex ia IIC T4 (-40°C ≤ Ta ≤+70 °C) IP66/67 Entity Parameters: Ui ≤ 28 Vdc, Ii ≤ 94.3 mA, Pi ≤ 0.66 W Ci = 36 nF/26 nF for models with/without Arrester Li = 0.7 mH/0.6 mH for models with/without Analog Indicator

Authority (Digit 10 =)	Type n Nonincendive
ATEX (P)	Ex II 3 G Ex nA II T5 (-40°C ≤ Ta ≤+70 °C) IP66/67 Electrical ratings Model Without arrester: Ui ≤ 45 Vdc, 4-20 mA loop powered, Pi ≤ 1.0125 W Model With arrester: Ui ≤ 32 Vdc, 4-20 mA loop powered, Pi ≤ 1.0125 W Optional Analog indicator is not available for type "n"
Factory Mutual (H)	Class I II III Div.2 Groups A, B, C, D, F, G T4 Entity Type 4X Model code: 9th digit / 13th digit; Tamb A,B,C,D,J / Y,G,N / -40°C to +85°C L,P,M,1,2,3 / Y,G,N / -20°C to +80°C Q,S,N,4,5,6 / Y,G,N / -20°C to +60°C E,F,G,H,K / Y,G,N / -40°C to +60°C - / W,A,D / -10°C to +60°C
CSA (J)	Class I Div.2 Groups A, B, C, D Class II Div.2 Groups E, F, G Class III Div.2 Temp Code T5 Tamb max = +50°C Temp Code T4 Tamb max = +70°C Entity Parameters: Vmax = 28 Vdc, Imax = 94.3 mA, Pmax = 0.66 W Ci = 36 nF/25 nF for models with/without Arrester Li = 0.7 mH/0.6 mH for models with/without Analog Indicator
IECEx (Q)	Ex nA II T5 (-40°C ≤ Ta ≤+70 °C) IP66/67 Electrical ratings Model Without arrester: Ui ≤ 45 Vdc, 4-20 mA loop powered, Pi ≤ 1.0125 W Model With arrester: Ui ≤ 32 Vdc, 4-20 mA loop powered, Pi ≤ 1.0125 W Optional Analog indicator is not available for type "n"

Authority	Flameproof
ATEX (X)	Ex II 2 GD Ex d IIC T6 (-40°C ≤ Ta ≤ +65 °C) Ex d IIC T5 (-40°C ≤ Ta ≤ +85 °C) Ex tD A21 IP66/67 T 85°C Ex tD A21 IP66/67 T 100°C Electrical ratings Model Without arrester: Ui ≤ 45 Vdc, 4-20 mA loop powered, Pi ≤ 1.0125 W Model With arrester: Ui ≤ 32 Vdc, 4-20 mA loop powered, Pi ≤ 1.0125 W
Factory Mutual (D)	Class I Div.1 Groups B, C, D T6 Type 4X Class II III Div.1 Groups E, F, G T6 Type 4X Tamb max = +60°C
CSA (E)	Class I, Groups C and D; Class II, Groups E,F and G ; Class III Maximum ambient temperature 85°C Maximum working pressure 50 Mpa Electrical ratings Model Without arrester: Ui ≤ 45 Vdc, 4-20 mA Model With arrester: Ui ≤ 32 Vdc, 4-20 mA Note: "Seal not required"
IECEx (R)	Ex d IIC T6 (-40°C ≤ Ta ≤ +65 °C) Ex d IIC T5 (-40°C ≤ Ta ≤ +85 °C) DIP A21 IP66/67 T 85°C DIP A21 IP66/67 T 100°C Electrical ratings Model Without arrester: Ui ≤ 45 Vdc, 4-20 mA loop powered, Pi ≤ 1.0125 W Model With arrester: Ui ≤ 32 Vdc, 4-20 mA loop powered, Pi ≤ 1.0125 W

Zero/span adjustment:

Zero and span are adjustable from the HHC(1). Zero and span are also adjustable externally from the adjustment screw.

Damping:

Adjustable from HHC(1) or local adjustment unit with LCD display.

The time constant is adjustable between 0.12 to 32 sec.

Zero elevation/suppression:

-100% to + 100% of URL

Normal/reverse action:

Selectable from HHC(1)

Indication:

Analog indicator or 5-digit LCD meter

Burnout direction: Selectable from HHC(1)

If self-diagnostic detect transmitter failure, the analog signal will be driven to either “Output Hold”, “Output Overscale” or “Output Underscale” modes.

“Output Hold”:

Output signal is hold as the value just before failure happens.

“Output Overscale”:

Adjustable within the range 20.0 mA to 22.5 mA from HHC(1)

“Output Underscale”:

Adjustable within the range 3.2 mA to 4.0 mA from HHC(1)

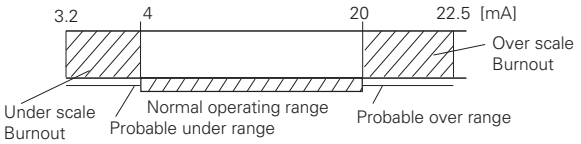

Output limits conforming to NAMUR NE43 by order

Loop-check output:

Transmitter can be configured to provide constant signal 3.2mA through 22.5 mA by HHC(1).

Temperature limit:

Ambient: -40 to + 85°C
-20 to + 80°C (for LCD indicator)
-40 to + 60°C (for arrester option)
-10 to + 60°C (for fluorinated oil fill transmitter)

For explosionproof units (flameproof or intrinsic safety), ambient temperature must be within the limits specified in each standard.

Process:

	Code in the 13th digit of “Code symbols”	Process temperature	Lower limit of static pressure
Fluorinated oil	W, A	-20 to 120°C	Atmospheric
Silicone oil	Y and G	-40 to 150°C	20 torr

Note: For higher process temperature, please consult Fuji Electric.

Storage:
-40 to + 90°C

Humidity limit:

0 to 100% RH (Relative Humidity)

Communication:

With HHC(1) (model FXW, consult DS_EDS8-47), following items can be remotely displayed or configured.

Note: HHC’s version must be higher than 7.0 (or FXW □□□□1–□4), for FCX-AII for supporting these items: “Saturate current”, “Write protect”, and “History”.

Items	Protocole FUJI avec le FXW.		Protocole Hart ®		Configuration par 3 boutons poussoir (affichage LCD)	
	Affich.	Régl.	Affich.	Régl.	Affich.	Régl.
N° de repère	v	v	v	v	v	v
N° de modèle	v	v	v	v	v	v
N° de série & version logiciel	v	—	v	—	v	—
Unités physiques	v	v	v	v	v	v
Limite de mesure maxi	v	—	v	—	v	—
Etendue de mesure	v	v	v	v	v	v
Amortissement	v	v	v	v	v	v
Type de signal de sortie – Linéaire	v	v	v	v	v	v
Type de signal de sortie – Racine carrée	v	v	v	v	v	v
Valeurs de repli	v	v	v	v	v	v
Etalonnage	v	v	v	v	v	v
Générateur de courant	—	v	—	v	—	v
Valeurs de mesure	v	—	v	—	v	—
Auto diagnostic	v	—	v	—	v	—
Imprimante (option)	v	—	—	—	—	—
Vis de réglage externe	v	v	v	v	v	—
Affichage capteur	v	v	v	v	v	—
Linéarisation*	v	v	—	—	—	—
Reréglage de l’étendue de mesure	v	v	v	v	v	v
Saturation courant	v	v	v	v	v	v
Protection en écriture	v	v	v	v	v	v
Historique – Historique d’étalonnage	v	v	v	v	v	v
Historique – Historique T° ambiante	v	—	v	—	v	—

(Note) (1) HHC: Hand Held Communicator

***Local configurator with LCD display (option):**

Local configurator with 3 push button and LCD display can support all items (Fuji Protocol list) except “Linearize” function.

Programmable output linearization function:

Output signal can be characterized with “14 points linear approximation function” from HHC(1).

Performance specifications

Reference conditions, silicone oil fill, SS 316L isolating diaphragms, 4-20 mA analog output.

Accuracy rating:

(including linearity, hysteresis, and repeatability)

(Standard)

For spans greater than 1/10 of URL:

±0.165% of span

For spans below 1/10 of URL:

$$\pm\left(0.1 + 0.1\,\frac{0.1 \times \text{URL}}{\text{Span}}\right)\%\ \text{of span}$$

(Option)

For span greater than 1/10 of URL:

0.1% of span

For span below 1/10 of URL:

$$\pm\left(0.05 + 0.05\,\frac{0.1 \times \text{URL}}{\text{Span}}\right)\%\ \text{of span}$$

Stability:

±0.2% of upper range limit (URL) for 10 years.

Temperature effect:

Effects per 28°C change between the limits of -40°C and +85°C

Zero shift (transmitter only): ±0,3 Of URL

Zero shift (level kit only): +0,3 mbar/28°C

Total effect (level kit and transmitter): ±0,3% Of URL

Note : The indicated values are for temperature compensation made on transmitter only, without level kit.

Zero shift is improved (2 to 3 times) by an additional temperature compensation of the complete level transmitter (level kit and transmitter)

Static pressure effect:
Zero shift: ±0.2% of URL / 1MPa
Span shift: -0.2% of calibrated span / 1MPa
Double the effects for material code (7th digit in codes symbols) “H”, “M”, “T”, “B”, “P” and “R”

Overrange effect:
Zero shift; ±0.15% of URL (160bar max)
Double the effects for material code (7th digit in codes symbols) “H”, “M”, “T”, “B”, “P” and “R”

Supply voltage effect:
Less than 0.005% of calibrated span per 1 V

Update rate: 60 msec

RFI effect :
< 0,2% of URL for the frequences of 20 to 1000 MHz and field strength of 10 V/m when electronic housing covers are on (Classification : 2-abc : 0,2% of span according SAMA PMC 33.1)

Response time: (at 63,3% of output signal without damping)

Range code	Time constant (at 23°C)	Dead time
“3”	550 msec	120 msec approx.
“5” to “8”	300 msec	

Response time = time constant + dead time

Mounting position effect:
Zero shift, less than 30 mmH_2O for a 10° tilt in any plane (no extension). This error can be corrected by adjusting zero. (Double the effect for fluorinated fill sensor).
No effect on span.

Vibration effect:
< ±0,25% of span for spans greater than 1/10 of URL. Frequency 10 to 150 Hz, acceleration 39,2 m/sec^2 .

Material fatigue: Please consult Fuji Electric.

Dielectric strength:
500 V AC, 50/60Hz 1 min., between circuit and earth

Insulation resistance:
More than 100MΩ at 500V DC.

Turn-on time: 4 seconds

Internal resistance for external field indicator:
12 Ω Max (connected to test terminal CK+ and CK-)

Pressure equipment directive (PED) 97/23/EC
According to Article 3.3

Physical specifications

Electrical connections:
1/2-14 NPT, Pg13.5 or M20 x 1.5

Process connections:
LP side: Standard : 1/4-18 NPT
Option : 1/2-14 NPT with oval flanges
HP side: ANSI or DIN raised face flange.
Raised face flange machining:
Stockfinish - SS 316L diaphragm
Smooth finish - Other diaghragm materials

Process-wetted parts material:

Material code (7th digit in “Code symbols”)	LP side			HP side
	Process cover	Diaphragm	Wetted sensor body	Diaphragm & flange face
V	SS 316L	SS 316L	SS 316L	SS 316L
W	SS 316L	Hastelloy-C	SS 316L	Hastelloy-C
H	SS 316L	SS 316L	SS 316L	Hastelloy-C
M	SS 316L	SS 316L	SS 316L	Monel
T	SS 316L	SS 316L	SS 316L	Tantalum
A	SS 316L	SS 316L	SS 316L	SS 316L + FEP lining diaphragm
B	SS 316L	SS 316L	SS 316L	SS 316L + Gold coating
P	SS 316L	SS 316L	SS 316L	Titanium
R	SS 316L	SS 316L	SS 316L	Zirconium

Note: Gasket : Viton O-ring or PTFE/15% graphite square section gasket.

Non-wetted parts material:
Electronics housing:
Low copper die-cast aluminum, finished with polyester coating (standard), or SS 316 as specified.
Bolts and nuts:
Cr-Mo alloy (standard) or SS 316(L)
Fill fluid:
Silicone oil (standard) for the measuring cell and level kit
Silicone oil (standard) for the measuring cell and fluorinated oil (or specific oils upon request) for the level kit.
Mounting flange:
316L SS

Environmental protection:
IEC IP66/67 and NEMA 4X

Flange mounting:
See drawings

Mass {weight}:
Transmitter:
Approx. 10.2 to 19.2 kg without options.
Add; 0.3 kg for indicator
0.5 kg for mounting bracket
4.5 kg for stainless steel housing (option)
1.0 kg per 50mm extension of diaphragm

ACCESSORIES

Oval flanges:
Converts process connection to 1/2-14 NPT

Hand held communicator:
(Model FXW, refer to datasheet (EDS8-47)

Optional features

Indicator:
A plug-in analog indicator (2.5% accuracy) can be housed in the electronics compartment or in the terminal box of the housing.
An optional 5 digit LCD meter with engineering unit is also available.

Local configurator with LCD display:
An optional 5 digits LCD meter with 3 push buttons can support items as using communication with HHC.

Arrester:
A built-in arrester protects the electronics from lightning surges.
Lightning surge immunity: 4 kV (1.2 × 50μs)

Oxygen service:
Special cleaning procedures are followed throughout the process to maintain all process wetted parts oil-free.
The fill fluid is fluorinated oil.

Chlorine service:
Oil free procedures as above. Includes fluorinated oil for fill.

Degreasing:
Process-wetted parts are cleaned, but the fill fluid is standard silicone oil. Not for use on oxygen or chlorine measurement.

NACE specification:
Metallic materials for all pressure bound ary parts comply with NACE MR 0175/ISO 15156.
SS 660 bolts and nuts comply with NACE MR 0175/ISO 15156.

Optional tag plate:
An extra stainless steel tag with customer tag data is wired to the transmitter.

Vacuum service:

Special silicone oil and filling procedure are applied.
See Fig.1 and Fig.2 below

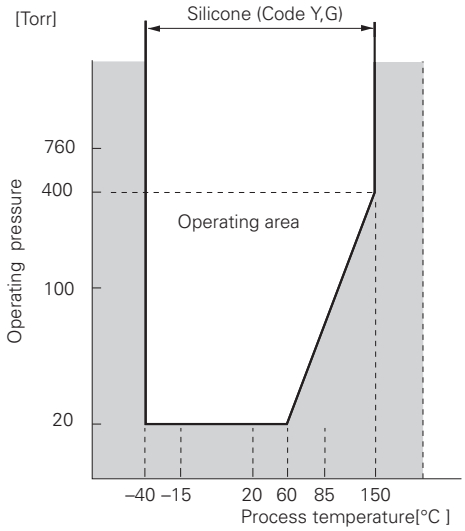

Fig. 1 Relation between process temperature and operating pressure

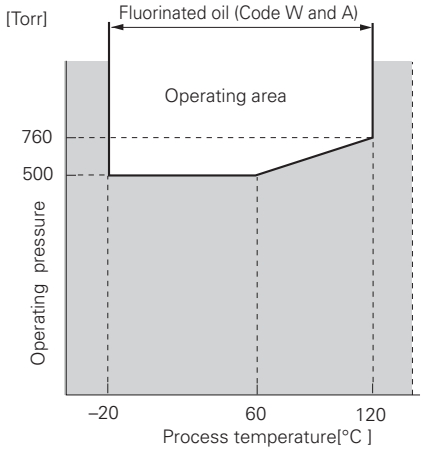

Fig. 2 Relation between process temperature and operating pressure

EMC Directive (2004/108/EC)

All models of **FCX** series transmitters type **FCX-AII** are in accordance with :

• the harmonized standards:
- EN 61326-1 : 2006 (Electrical equipment for measurement, control and laboratory use - EMC requirements).
- EN 61326-2-3 : 2006 (Part 2-3 : Particular requirements - Test configuration, operational conditions and performance criteria for tranducers with integrated or remote signal conditioning)

Emission limits : EN 61326-1 : 2006

Frequency range (MHz)	Limits	Basic standard
30 to 230	40 dB (µV/m) quasi peack, measured at 10 m distance	EN 55011 / CISPR 11 Group 1 Class A
230 to 1000	47 dB (µV/m) quasi peack, measured at 10 m distance	

Immunity requirements : EN 61326-1 : 2006 (Table 2)

Phenomenon	Test value	Basic standard	Performance criteria
Electrostatic discharge (EDS)	4 kV (Contact) 8 kV (Air)	EN 61000-4-2 IEC 61000-4-2	**B**
Electromagnetic field	10V/m (80 to 1000 MHz) 3 V/m (1.4 to 2.0 GHz) 1 V/m (2.0 to 2.7 GHz)	EN 61000-4-3 IEC 61000-4-3	**A**
Rated power frequency Magnetic field	30 A/m	EN 61000-4-8 IEC 61000-4-8	**A**
Burst	2 kV (5/50 NS, 5 kHz	EN 61000-4-4 IEC 61000-4-4	**B**
Surge	1 kV Line to line 2 kV Line to line	EN 61000-4-5 IEC61000-4-5	**B**
Conducted RF	3 V (150 kHz to 80 MHz)	EN 61000-4-6 IEC61000-4-6	**A**

Performance criteria :

A : During testing, normal performance within the specification limits.

B : During testing, temporary degradation or loss of function or performance which is self-recovering.

CODE SYMBOLS

1	2	3	4	5	6	7	8		9	10	11	12	13		14	15		16	DESCRIPTION
F	K	E					F	-						-			-		

Type
Smart, 4-20 mAdc + Fuji/Hart® digital signal

Connections

	LP side connections		Electric. housing
	Process	Oval flange screw	Conduit connection
R	1/4-18 NPT	7/16-20 UNF	M 20 x 1,5
T	1/4-18 NPT	7/16-20 UNF	1/2-14 NPT
V	1/4-18 NPT	M10	Pg 13,5
W	1/4-18 NPT	M10	M 20 x 1,5
X	1/4-18 NPT	7/16-20 UNF	Pg 13,5

Mounting flange

	Material	Size and rating	Flange mount. position
4	SS 316 L	ANSI-150LB3"-ISO PN 20 DN 80	Long design
5		ANSI-150LB4"-ISO PN 20 DN 100	
8		DIN PN40 DN80	
9		DIN PN16 DN100	
L		ANSI-150LB3"-ISO PN 20 DN 80	Short design
M		ANSI-150LB4"-ISO PN 20 DN 100	
P		DIN PN40 DN80	
Q		DIN PN16 DN100	

Measuring range (mmH2O)

2	(*7)	10	600
3	(*1)	32	3200
5		130	13000
6		500	50000
8		3000	300000

Material

		LP side			HP side
		Process cover	Diaphragm	Wetted sensor body	Diaphragm and flange face
V		SS 316L	SS 316L	SS 316L	SS 316L
W	(*2)	SS 316L	Hastelloy-C	SS 316L	Hastelloy-C
H	(*2)	SS 316L	SS 316L	SS 316L	Hastelloy-C
M	(*2)	SS 316L	SS 316L	SS 316L	Monel
T	(*2)	SS 316L	SS 316L	SS 316L	Tantalum
A	(*2)	SS 316L	SS 316L	SS 316L	SS 316L + PFA lining
B	(*2)	SS 316L	SS 316L	SS 316L	SS 316L + gold coat
P	(*2)	SS 316L	SS 316L	SS 316L	Titanium
R	(*2)	SS 316L	SS 316L	SS 316L	Zirconium

Indicator and arrester

	Indicator	Arrester	Initial setting
F - A	None	None	4-20mA DC + Hart® /Fuji digital signal 'SMART"
F - B	Analog, 0 to 100% linear scale	None	
F - D	Analog, custom scale	None	
F - J	Analog, double scale	None	
F - E	None	Yes	
F - F	Analog, 0 to 100% linear scale	Yes	
F - H	Analog, custom scale	Yes	
F - K	Analog, double scale	Yes	
F - L	Digital, 0 to 100%	None	
F - P	Digital, custom scale	None	
F - Q	Digita, 0 to 100%	Yes	
F - S	Digital, custom scale	Yes	
F - 1	Digital, 0 to 100% with push button	None	
F - 2	Digital, custom scale with push button	None	
F - 4	Digita, 0 to 100% with push button	Yes	
F - 5	Digital, custom scale with push button	Yes	

Approvals for hazardous locations (consult FUJI for availability)

A		None (Standard)
X		ATEX - Flameproof enclosures (digit 4 = "R, T" & "W" only)
K		ATEX - Intrinsic Safety
D	(*6)	FM - Explosion-Proof (digit 4 = "T" only)
E		CSA - Explosion-Proof (digit 4 = "T" only)
H		FM - Intrinsic Safety and Non Incendive
J		CSA - Intrinsic Safety
P		ATEX - Type "n" (digit 9 = A, E, 1, 2, 3, 4 & 5 only)
Q		IECEx - Type "n" (digit 9 = A, E, 1, 2, 3, 4 & 5 only)
R		IECEx - Flameproof enclosures (digit 4 = "R, T" & "W" only)
T		IECEx - Intrinsic Safety
L		CSA - Explosion-Proof & Intrinsic Safety combined approval (digit 4 = "T" only)
M		ATEX - Flameproof enclosures & Intrinsic Safety combined approval (digit 4 = "R, T" & "W" only)
N		IECEx - Flameproof enclosures & Intrinsic Safety combined approval (digit 4 = "R, T" & "W" only)
V		FM - Explosion-Proof & Intrinsic Safety combined approval (digit 4 = "T" only)

Diaphragm extension (mm)

		Extension (mm)	Applicable material code
Y		0	Any
A	(*3)	50	Material code "V"
B	(*3)	100	
C	(*3)	150	
D	(*3)	200	
E	(*3)	50	Material code "H"
F	(*3)	100	
G	(*3)	150	
H	(*3)	200	
J	(*3)	50	Material code "M"
K	(*3)	100	
L	(*3)	150	
M	(*3)	200	
P	(*3)	50	Material code "T"
R	(*3)	100	
S	(*3)	150	
T	(*3)	200	

SS parts

	SS tag plate	SS housing
Y	None	None
B	Yes	None
C	None	Yes
E	Yes	Yes

Special applications and fill fluid (fill fluid of cell = Silicone oil)

		Treatment	Fill fluid of diaphragm seal
Y		None (stand)	Silicone oil
W		None (stand)	Fluorinated oil
F		None (stand)	Sanitary fill fluid
G		Degreasing	Silicone oil
A		Oxygen service	Fluorinated oil cell & seal (Material code "V" only)
D		Chlorine service	Fluorinated oil (Material code "H" & "T" only)
N	(*5)	NACE	Silicone oil
V		Vacuum (max 27 mbar abs)	

Process cover gasket

- A	Viton
- C	PTFE square section gasket in SS flange (FEF design)

Bolts/screws material

A	Cr-Mo (standard)
U	SS 316 (L) /316 (L) (bolts/nuts)
W	SS 660/660 (bolts/nuts)

Special options or design

(*4)	- *	Special, no code available

Notes* :

1- Turn down of 100 : 1 is possible, but it should be used at a span greater than 1/40 of the maximum span for better performance.
2- Add values for material options are for DN80 PN40 or ANSI-150 LB3" flange rate, DN100 or 4" add values are available upon request, LP side writed cell body diaphragm in exotic materials are available upon request.
3- All wetted parts in the same material (diaphragm, extension, flange gasket area)
4- When no code can be found in the current code symbols, place* in concerned code digit(s) & add* in 16 th digit
5- Our stainless steel bolts/nuts in SS 660 are in conformity with the NACE MR 0175/ISO 15156 requirements and must be used for NACE MR 0175/ISO 15156 service
6- Code "D & V" FM approval only possible with electrical connection 1/2"-14 NPT.
7- Please consult Fuji with you application conditions

OUTLINE DIAGRAM for short design (Unit:mm)

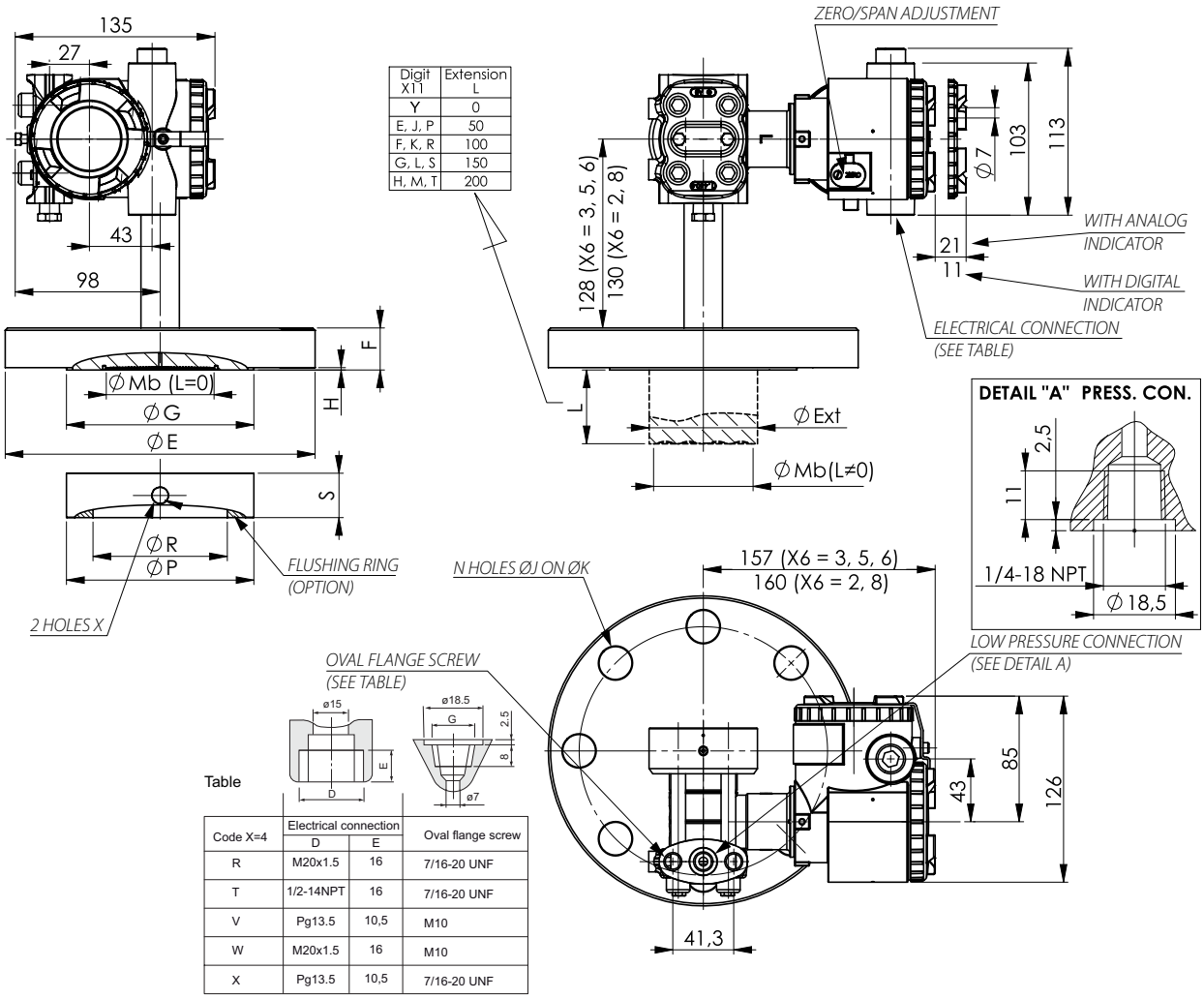

Digit X11	Extension L
Y	0
E, J, P	50
F, K, R	100
G, L, S	150
H, M, T	200

Table

Code X=4	Electrical connection D	Electrical connection E	Oval flange screw
R	M20x1.5	16	7/16-20 UNF
T	1/2-14NPT	16	7/16-20 UNF
V	Pg13.5	10,5	M10
W	M20x1.5	16	M10
X	Pg13.5	10,5	7/16-20 UNF

FLANGES DIMENSIONS ACCORDING TO EN 1092-1 & EN 1759-1									Diaphragm & extension – Exotic material	
EN 1092-1	EN 1759-1	ØE	F min	ØG	H	N x ØJ	ØK	Weight (kg)	L=0 (X11=Y) ØMb	L≠0 ØExt(ØMb)
DN50 PN40		165	20	102	2	4 x 18	125	3,3	59	48,3 (47)
	2" CLASS 150	152	21	92	1,6	4 x 19	120,6	2,7	59	48,3 (47)
	2" CLASS 300	165	22,5	92	1,6	8 x 19	127	3.7	59	48,3 (47)
DN80 PN40		200	24	138	2	8 x 18	160	5,8	89	76 (72)
	3" CLASS 150	190	24	127	1,6	4 x 19	152,4	5,3	89	76 (72)
	3" CLASS 300	210	28,5	127	1,6	8 x 22,2	168,3	7,8	89	76 (72)
DN100 PN16		220	22	158	2	8 x 18	180	5,9	89	94 (89)
	4" CLASS 150	229	24	157	1,6	8 x 19	190,5	7,7	89	94 (89)
	4" CLASS 300	254	32	157	1,6	8 x 22,2	200	12,7	89	94 (89)

FLUSHING RINGS DIMENSIONS					
EN 1092-1	EN 1759-1	HOLES X	ØP	ØR	S
DN 80		1/4-18 NPT	138	91	30
DN 80		1/2-14 NPT	138	91	30
	NPS 3"	1/4-18 NPT	127	91	30
	NPS 3"	1/2-14 NPT	127	91	30
DN 100		1/4-18 NPT	162	116	30
DN 100		1/2-14 NPT	162	116	30
	NPS 4"	1/4-18 NPT	157	116	30
	NPS 4"	1/2-14 NPT	157	116	30

Weight :
4 kg (without option) Add :
- *Flange's weight (see table)*
- *1 kg per 50 mm of extension*
- *0,8 kg for indicator (option)*
- *2 kg for SS mounting bracket (option)*

X_1 X_2 X_3 X_4 X_5 X_6 X_7 X_8- X_9 $X_{10}$$X_{11}$ $X_{12}$$X_{13}$- X_{14} X_{15}
F K E □□□□ F - □□□□□ - □□

X7 = H, M, T, P, R

X11 = Y, E, F, G, H, J, K, L, M, P, R, S, T

	SPAN LIMIT Min.	SPAN LIMIT Max.
FKE□□2	0,1 KPa (1 mbar)	6 KPa (60 mbar)
FKE□□3	0,32 KPa (3,2 mbar)	32 KPa (320 mbar)
FKE□□5	1,3 KPa (13 mbar)	130 KPa (1,3 bar)
FKE□□6	5 KPa (50 mbar)	500 KPa (5 bar)
FKE□□8	30 KPa (300 mbar)	3 MPa (30 bar)

CONNECTION DIAGRAM

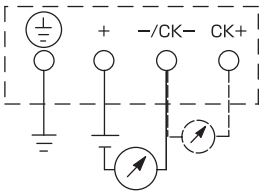

OUTLINE DIAGRAM for long design (Unit:mm)

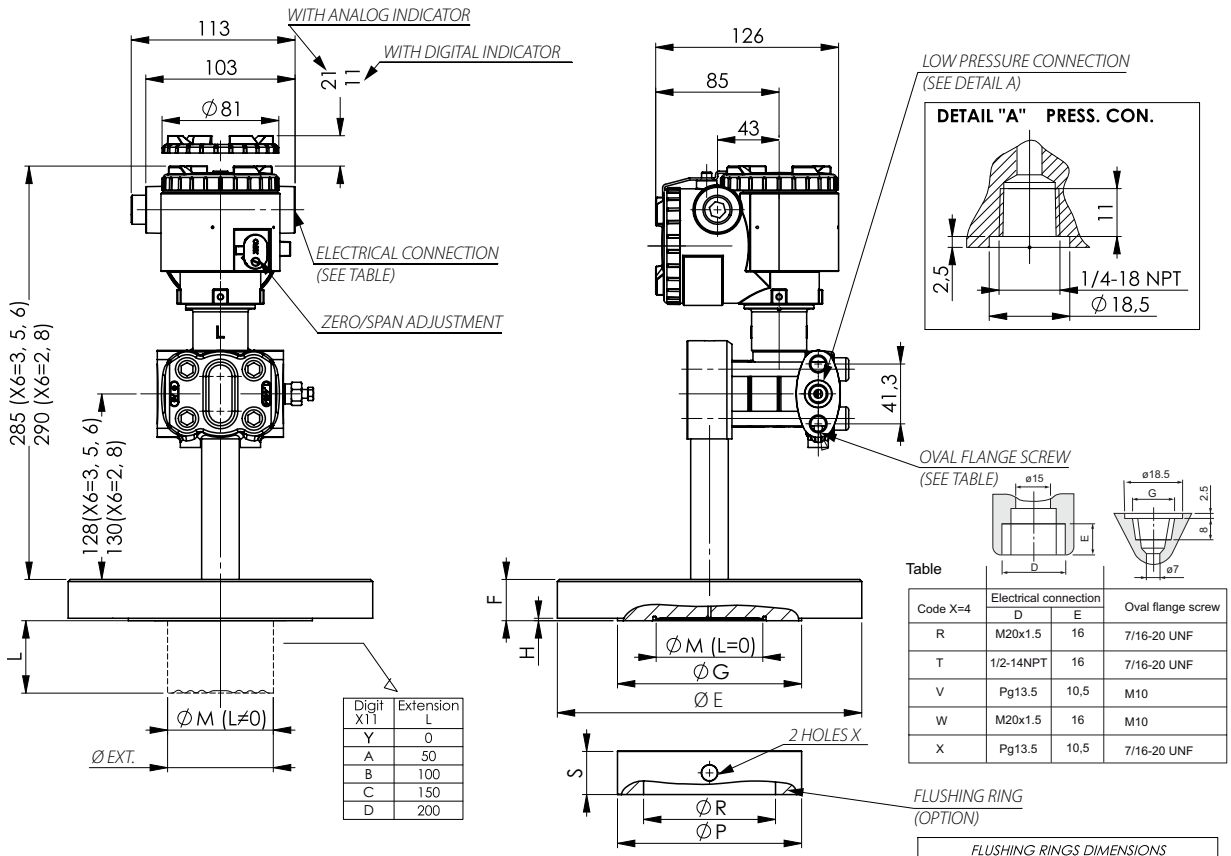

Digit X11	Extension L
Y	0
A	50
B	100
C	150
D	200

Table

Code X=4	Electrical connection D	Electrical connection E	Oval flange screw
R	M20x1.5	16	7/16-20 UNF
T	1/2-14NPT	16	7/16-20 UNF
V	Pg13.5	10,5	M10
W	M20x1.5	16	M10
X	Pg13.5	10,5	7/16-20 UNF

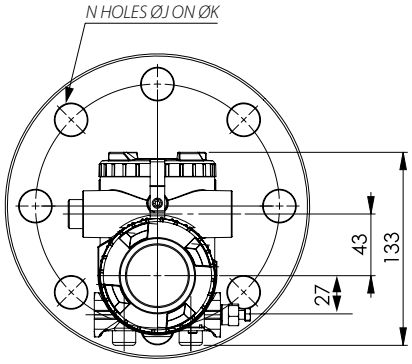

FLUSHING RINGS DIMENSIONS					
EN 1092-1	EN 1759-1	HOLES X	ØP	ØR	S
DN 80		1/4-18 NPT	138	91	30
DN 80		1/2-14 NPT	138	91	30
	NPS 3"	1/4-18 NPT	127	91	30
	NPS 3"	1/2-14 NPT	127	91	30
DN 100		1/4-18 NPT	162	116	30
DN 100		1/2-14 NPT	162	116	30
	NPS 4"	1/4-18 NPT	157	116	30
	NPS 4"	1/2-14 NPT	157	116	30

FLANGES DIMENSIONS ACCORDING TO EN 1092-1 & EN 1759-1								Diaphragm & extension		Weight (kg)
EN 1092-1	EN 1759-1	ØE	F min	ØG	H	N x ØJ	ØK	L=0 ØM	L≠0 ØM=ØExt	
DN 50 PN 10/40		165	20	102	2	4 x 18	125	59	48	3,3
	NPS 2" CLASS 150	152	21	92	1,6	4 x 19	120,6	59	48	2,7
	NPS 2" CLASS 300	165	22,5	92	1,6	8 x 19	127	59	48	3,7
DN 80 PN 40		200	24	138	2	8 x 18	160	73	73	5,8
	NPS 3" CLASS 150	190	24	127	1,6	4 x 19	152,4	73	73	5,3
	NPS 3" CLASS 300	210	28,5	127	1,6	8 x 22,2	168,3	73	73	7,8
DN 100 PN 16		220	22	158	2	8 x 18	180	96	96	5,9
	NPS 4" CLASS 150	229	24	157	1,6	8 x 19	190,5	96	96	7,7
	NPS 4" CLASS 300	254	32	157	1,6	8 x 22,2	200	96	96	12,7

Weight :
4 kg (without option) Add :
- *Flange's weight (see table)*
- *1 kg per 50 mm of extension*
- *0,8 kg for indicator (option)*
- *2 kg for SS mounting bracket (option)*

X_1 X_2 X_3 X_4 X_5 X_6 X_7 X_8- X_9 $X_{10}$$X_{11}$$X_{12}$$X_{13}$- X_{14} X_{15}
F K E □□□□ F - □□□□□ - □□

X7 = V, W, A, B

X11 = Y, A, B, C, D

	SPAN LIMIT Min.	SPAN LIMIT Max.
FKE□□2	0,1 KPa (1 mbar)	6 KPa (60 mbar)
FKE□□3	0,32 KPa (3,2 mbar)	32 KPa (320 mbar)
FKE□□5	1,3 KPa (13 mbar)	130 KPa (1,3 bar)
FKE□□6	5 KPa (50 mbar)	500 KPa (5 bar)
FKE□□8	30 KPa (300 mbar)	3 MPa (30 bar)

Fuji Electric

Fuji Electric Corp. of America
Instrumentation & Control Division
50 Northfield Avenue Edison, NJ 08837 USA
Phone: 732-560-9410
x-fea-icsales@fujielectric.com
www.americas.fujielectric.com

Fuji Electric can accept no responsibility for possible errors in catalogues, brochures and other printed material. Fuji Electric reserves the right to alter its products without notice. This also applies to products already on order provided that such alterations can be made without subsequential changes being necessary in specifications already agreed. All trademarks in this material are property of the respective companies. All rights reseved.