NDIR TYPE INFRARED GAS ANALYZER
(5-COMPONENT ANALYZER)

DATA SHEET

ZKJ

This gas analyzer (ZKJ) is capable of measuring the concentrations of NO, SO_2, CO_2, CO, CH_4, N_2O and O_2 components in sample gas.
NO, SO_2, CO_2, CO, CH_4 and N_2O are measured by non-dispersion infrared method (NDIR), while O_2 is measured by built-in type paramagnetic method sensor or external-mount type zirconia method sensor. A maximum of 5 components including O_2 (max. 4 components except for O_2 measurement) are simultaneously measurable.
The mass flow type twin detector of high sensitivity and reliability adopted in the infrared ray method detection block makes the measurement hardly affected by interfering components.
In addition, a microprocessor is built in and a large-size liquid crystal display is equipped for easier operation, higher accuracy and more functions.
Optimum as an analyzer unit of measurement system for combustion exhaust gas from refuse incinerator and boiler, or gas from different industrial furnaces.

FEATURES

1. Measure five components including O_2 simultaneously and continuously
   Simultaneously and continuously measures up to four components out of NO, SO_2, CO, CO_2, CH_4 and N_2O, plus O_2, or up to totally five components.
2. Hardly affected by interference by other gases
   The mass flow type twin detector of high sensitivity and reliability adopted makes the measurement hardly affected by interfering components, ensuring a stable operation.
3. Equipped with abundant functions
   O_2 conversion, average value computation, automatic calibration, one touch calibration, upper/lower limit alarm, remote measurement range changeover, range identification signal output, etc. incorporated can configure applications to match particular uses.
4. Easy-to-see large LCD unit
   The large LCD unit adopted allows observing easily the indication of all measured components and computation values.
   The interactive operation facilitates setting.
5. 19 inch rack mount structure
   The mainframe unitized to 19 inch rack type and electrical signal input/output terminal unit also unitized easily configure a gas analyzer system.
6. Maximum range ratio is 1 to 25
   Measuring ranges are changeable.
7. Drift +/-1% FS/week (more than 0 to 200ppm range)

SPECIFICATIONS

Standard Specifications

Principle of measurement:

NO, SO_2, CO_2, CO, CH_4, N_2O;
Non-dispersion infrared-ray absorption method
Single light source and double beams (double-beam system)

O_2 ; Paramagnetic O_2 sensor (built in) or zirconia O_2 sensor (externally installed)

Measurable gas components and measuring range:

	Minimum range	Maximam range
NO	0 – 50ppm	0 – 5000ppm
SO_2	0 – 50ppm	0 – 10vol%
CO_2	0 – 20ppm	0 – 100vol%
CO	0 – 50ppm	0 – 100vol%
CH_4	0 – 200ppm	0 – 100vol%
N_2O	0 – 200ppm	0 – 2000ppm
O_2 (built in)	0 – 5vol%	0 – 25vol%
O_2 (External Zirconia)	0 – 5vol%	0 – 25vol%

- Max. 5 components measurement including O_2.
- Measuring range ratio ≤ 1:5 (O_2)
  ≤ 1:25
  (except for O_2)
- Measuring ranges are changeable between the specified minimum and maximum range
  Settable one range or two ranges
- When only N_2O analyzer is used, make sure not to contain any components other than N_2O.
  Multicomponent analyzers including N_2O analyzer + CO_2 analyzer are used for sludge incineration. In this case, the range of N_2O is 0 to 200ppm/500ppm, and the range of CO_2 is 0 to 10%/20%.

*For measurable components and possible combinations of measuring ranges, refer to Tables 1-(1) to (3).

Measured value indication:

Digital indication in 4 digits (LCD with back light)

- Instantaneous value of each component
- Instantaneous value after O_2 conversion (only in NO, SO_2, CO measurement with O_2)
- Average value after O_2 conversion (only in NO, SO_2, CO measurement with O_2)
- O_2 average value

Analog output signals:

* Inputs/outputs of analog signals are possible by combining with the input/output terminal module.

4 to 20mA DC or 0 to 1V DC,
non-isolated output ; 12 points max.
max.load550Ω. for 4 to 20 mA DC
min.load 100kΩ. for 0 to 1V DC

* Refer to Table 2, for the channel No. of displayed values and analog output signals.

Analog input signal:

For signal input from externally installed O_2 sensor.
Signal requirement;
(1) Signal from Fuji's Zirconia O_2 sensor (TYPE: ZFK7)
(2) 0 to 1V DC from an O_2 sensor
Input section is not isolated. This feature is effective when an O_2 sensor is not built in.
(Depend on O_2 input signal, measured concentration indication and O_2 conversion.)

Relay contact output:

1a contact (250V AC/2A, resistive load)
Instrument error, calibration error, range identification, auto calibration status, pump ON/OFF, peak alarm.
1c contact (250V AC/2A, resistive load selectable 6 outputs)
High/Low limit alarm contact output. Power disconnection alarm.

* All relay contacts are isolated mutually and from the internal circuit.

Contact input: No-voltage contact (ON/0V, OFF/5V DC, 5mA flowing at ON)
Remote range switch, auto calibration remote start, remote holding, average value resetting, pump ON/OFF
Isolated from the internal circuit with photocoupler. Contact inputs are not isolated from one another.

Transmission output:

Solenoid valve drive signal for automatic calibration.
Transistor output (100mA or less)

Power supply:

Voltage rating	; 100V to 240V AC
Allowable range	; 85V to 264V AC
Frequency	; 50Hz/60Hz
Power consumption	; 250VA max.
Inlet	; Conform to EN60320 Protection Class 1

Operating conditions:

Ambient temperature	; -5°C to 45°C
Ambient humidity	; 90% RH max., non-condensing

Storage conditions:

Ambient temperature	; -20°C to 60°C
Ambient humidity	; 100% RH max., non-condensing

Dimensions (H x W x D):

Analyzer main unit;
177 x 483 x 600mm
Input/output terminal module;
164 x 318 x 55mm

Mass: Approx. 22 kg (only Analyzer)

Finish color: Front panel; Off-white (Munsell 10Y7.5/0.5 or equivalent)
Casing; Plating, Steel-blue (gray)

Enclosure: Steel casing, for indoor use

Material of gas-contacting parts:

Gas inlet/outlet; SUS304
Sample cell; SUS304,chloroprene rubber
Infrared-ray transmitting window; CaF_2
O_2 sensor sample cell : SUS316
Internal piping; Toaron, Teflon

Gas inlet/outlet: Rc1/4 or NPT1/4 internal thread

Purge gas flow rate: 1L/min (when required)

Standard Functions

Output signal holding:

Output signals are held during manual and auto calibrations by activation of holding (turning "ON" its setting).
The values to be held are the ones just before start calibration mode or setting value.
It is selectable.
Indication of instantaneous values will not be held.

Remote output holding:

Output signal is held at the latest value or setting value by short-circuiting the remote output holding input terminals.
Holding is maintained while the terminals are short-circuited. Indication of instantaneous values will not be held.

Switch ranges :

The switch ranges is available in manual, auto, and remote modes. Only preset switch method is effective.

Manual: Allows range to switch by key operation.

Auto: Allows range to switch from low to high range when 90%FS or more is available in the low range.
Allows range to switch from high to low range when 80%FS or less is available in the low range.

Remote: No-voltage contact input (for measurable components)
Allows range to switch via an external signal when remote range switch input is received.
When the contact input terminals for each component are short-circuited, the first range is selected, and it is switched to the second range when the terminals are open.

Range identification signal:

The present measuring range is identified by a contact signal.
The contact output terminals for each component are short-circuited when the first range is selected, and when the second range is selected, the terminals are open.

Auto calibration:

Auto calibration is carried out periodically at the preset cycle.
When a standard gas cylinder for calibration and a solenoid valve for opening/closing the gas flow line are prepared externally by the customer, calibration will be carried out with the solenoid valve drive contacts for zero calibration and each span calibration turned on/off sequentially at the set auto calibration timing.

Auto calibration cycle setting:

Auto calibration cycle is set.
Setting is variable within 1 to 99 hours (in increments of 1 hour) or 1 to 40 days (in increments of 1 day).

Gas flow time setting:

The time for flowing each calibration gas in auto calibration is set.
Settable within 60 to 900 seconds (in increments of 1 second)

Auto calibration remote start:

Auto calibration is carried out only once according to an external input signal.
Calibration sequence is settable in the same way as the general auto calibration.
Auto calibration is started by opening the auto calibration remote start input terminals after short-circuiting for 1.5 seconds or longer.

Auto zero calibration:

Auto zero calibration is carried out periodically at the preset cycle.
This cycle is independent on "Auto calibradion" cycle.
When zero calibration gas and solenoid valve for opening/closing the calibration gas flow line are prepared externally by the customer, zero calibration will be carried out with the solenoid valve drive contact for zero calibration turned on/off at the set auto zero calibration timing.

Auto zero calibration cycle setting:

Auto zero calibration cycle is set.
Setting is variable within 1 to 99 hours (in increments of 1 hour) or Setting is variable within 1 to 40 days (in increments of 1 day)

Gas flow time setting:

The timing for flowing zero gas in auto zero calibration is set.
Settable 60 to 900 seconds (in increments of 1 second)

High/Low limit alarm:

Alarm contact output turns on when measurement value reach to the preset high or low limit alarm value.
Contacts close when the channel value of each channel becomes larger than the high alarm limit value or smaller than the low alarm limit value.

Instrument error contact output:

Contacts close at occurrence of analyzer error No. 1, 3 or 10.

Calibration error contact output:

Contacts close at occurrence of manual or auto calibration error (any of errors No. 4 to 9).

Auto calibration status contact outputs:

Contacts close during auto calibration.

Pump ON/OFF contact output:

During measurement, this contact close. While calibration gas is flowing, this contact open. This contact is connected in power supply of pump, and stop the sample gas while calibration gas flowing.

Optional Functions

O_2 conversion: Conversion of measured NO, SO_2 and CO gas concentrations into values at standard O_2 concentration

Conversion formula: $C = \frac{21-On}{21-Os} \times Cs$

C : Sample gas concentration after O_2 conversion
Cs : Measured concentration of sample gas
Os : Measured O_2 concentration (Limit settable, 1 to 20%O_2)
On: Standard O_2 concentration (value changeable by setting; 0 to 19%O_2)

Average value after O_2 conversion and O_2 average valu ecalculation: The result of O_2 conversion or instantaneous O_2 value can be outputted as an average value in the preset period of time.
Used for averaging is the moving average method in which sampling is carried out at intervals of 30 seconds.
(Output is updated every 30 seconds. It is the average value in the determined period of time just before the latest updating.)
Averaging time is settable within 1 to 59 minutes (in increments of 1 minute) or 1 to 4 hours (in increments of 1 hour).

Average value resetting:
The above-mentioned output of average value is started from the initial state by opening the average value resetting input terminals after short-circuiting for 1.5 seconds or longer.
Output is reset by short-circuiting and restarted by opening.

CO concentration peak count alarm:
(added only for CO/O_2 measurement)
Alarm output turns on according to the preset concentration and count.
Whenever the instantaneous value of CO exceeds the preset concentration value, count increments. If the count exceeds the preset value in one hour, the alarm contacts close.

Communication function:
RS-232C (9pins D-sub)
Half-duplex bit serial
Start-stop synchronization
Modbus™ protcol
Contents: Read/Wright parameters
Read measurement concentration and instrument status
Remark: When connecting via RS-485 interface, a RS-232C ⟷ RS-485 converter should be used.

Performance

Repeatability : ±0.5% of full scale
Linearity : ±1% of full scale
Zero drift : ±1% of full scale/week
(±2% of full scale/week; range be tween 0 to 50ppm and 0 to 200ppm)
(±2% of full scale/day; smaller than 0 to 50ppm range)
Span drift : ±2% of full scale/week
(±2% of full scale/day; smaller than 0 to 50ppm range)
Response time (for 90% FS response) :
15 sec electrical response
Within 60 seconds including replacement time of sampling gas (when gas flow rate is 0.5L/min)
Gas replacement time depends on the number of measuring components,and measuring range

Standard Requirements for Sample Gas

Flow rate : 0.5L / min ±0.2L / min
Temperature : 0 to 50°C
Pressure : 10 kPa or less (Gas outlet side should be open to the atmospheric air.)
Dust : 100μg/Nm^3 or less in particle size of 1μm or less
Mist : Unallowable
Moisture : Below a level where saturation occurs at 2°C (condensation unallowable).
Corrosive component:
1 ppm or less
Standard gas for calibration:
Zero gas ; Dry N_2
Span gas ; Each sample gas having concentration 90 to 100% of its measuring range (recommended).
Gas beyond concentration 100%FS is unusable.
In case a zirconia O_2 analyzer is installed externally and calibration is carried out on the same calibration gas line:
Zero gas ; Dry air or atmospheric air (provided without CO_2 sensor)
Span gas ; For other than O_2 measurement, each sample gas having concentration 90 to 100% of its measuring range.
For O_2 measurement, O_2 gas of 1 to 2 vol%.

Installation Requirements

- Indoor use. (Select a place where the equipment does not receive direct sunshine, draft/rain or radiation from hot substances. If such a place cannot be found, a roof or cover should be prepared for protection.)
- Avoide a place where receives heavy vibration
- Select a place where atmospheric air is clean

EC Directive Compliance

The product conforms to the requirements of the Low Voltage Directive 73/23/EEC and EMC directive 89/336/EEC (as amended by Directive 92/31/EEC), both as amended by Directive 93/68/EEC.
It conforms to following standards for product safety and electromagnetic compatibility ;

EN61010-1 : 2001 Safety requirements for electrical equipment for measurement, control and laboratory use.
"Installation Category II"
"Pollution Degree 2"

EN61326-1 : 1997, AI: 1998, A2: 2001
Electrical equipment for measurement, control and laboratory use — EMC requirements.

*The product mounted in a steel enclosure conforms to the requirements of EMC directive.

Principle diagram of NDIR type measurement (For NO, SO_2, CO_2, CO, CH_4, N_2O)

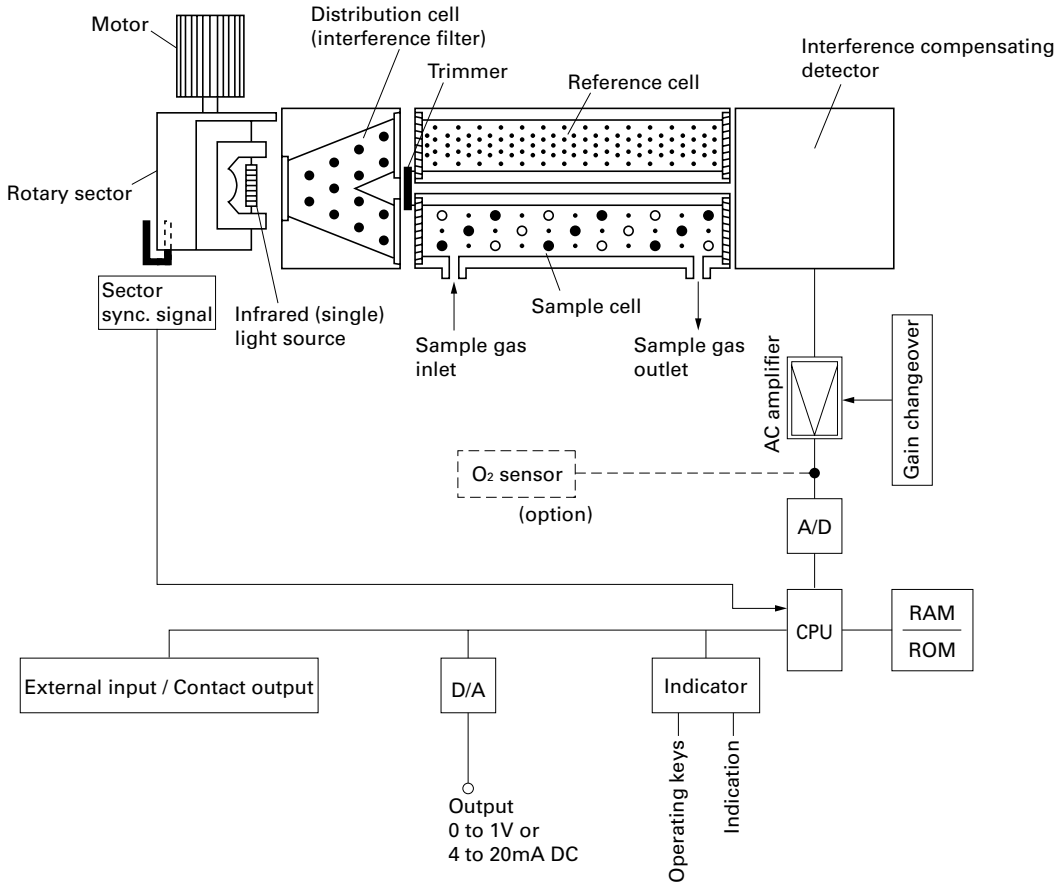

Principle diagram of paramagnetic type measurement (For O_2)

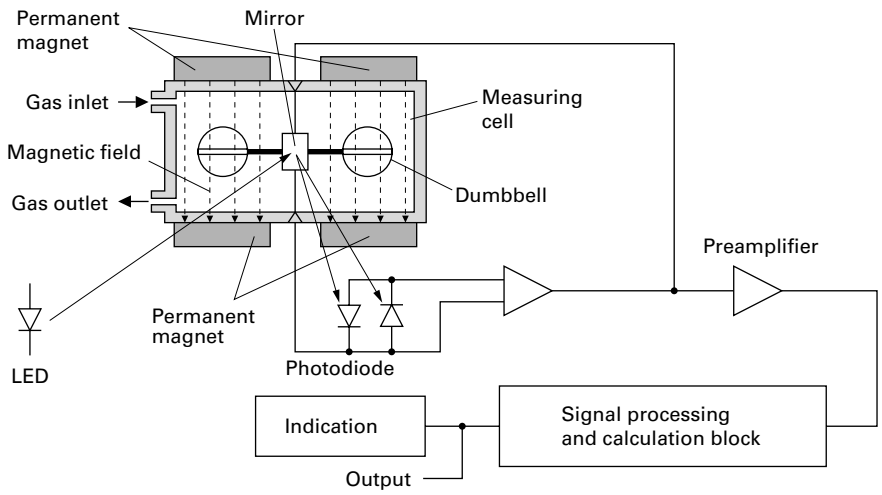

Example configuration of gas sampling system

The following illustrates a typical system configuration for five component gas measurement for monitoring combustion exhaust gas from boiler, refuse incinerator, etc.
Contact FUJI ELECTRIC for system configuration matching the particular use or further information.

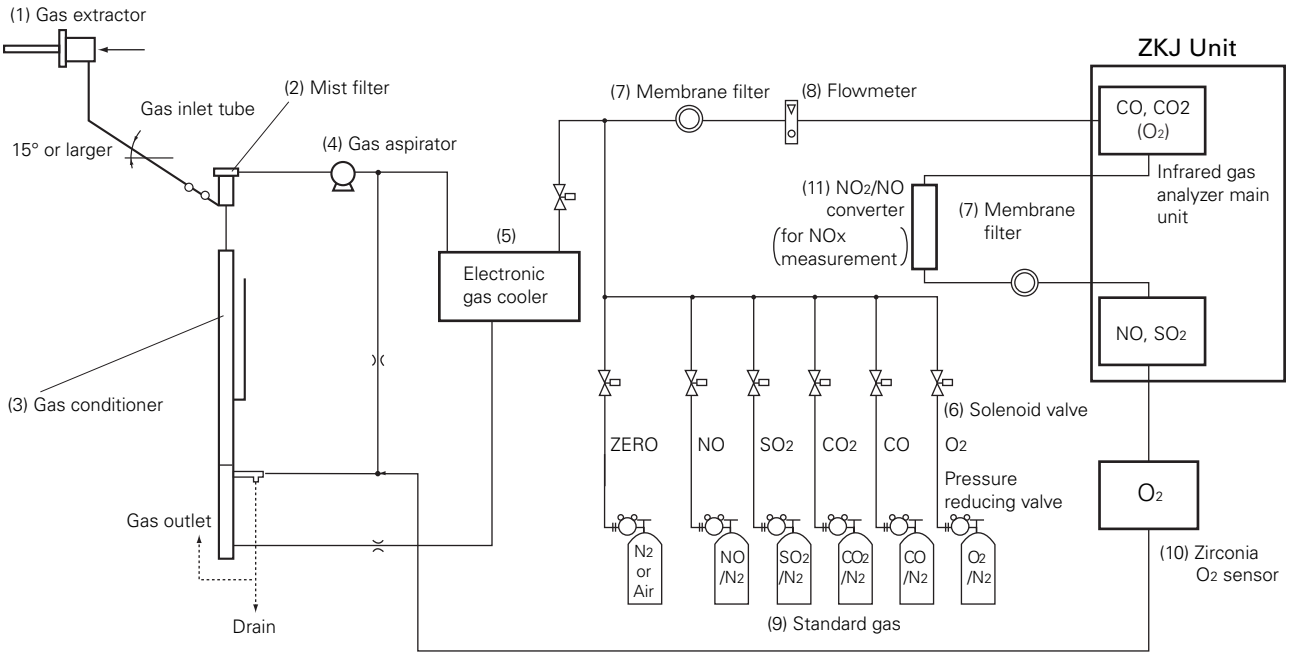

Functions of Individual Components

(1) Gas extractor: Gas extractor with a heating type stainless steel filter of standard mesh 40μm

(2) Mist filter: For separation of drain and removal of dust and mist

(3) Safety drain trap: Prevention of drain from being sucked and composite operation of constant-pressure bubbler

(4) Gas aspirator: For aspiration of sample gas (sample gas flow rate approx. 2L/min)

(5) Electronic gas cooler: Dries the moisture in sample gas to a dew point of approx. 3°C.

(6) Solenoid valve: Used for introducing calibration gas.

(7) Membrane filter: PTFE filter used to eliminate fine dust particles and permit monitoring of dust adhering condition on the front panel of the gas analyzer.

(8) Flowmeter: Adjusts and monitors the flow rate of sample gas.

(9) Standard gas: Reference gas used for calibrating zero and span of the analyzer. Total 6 cylinders required for air, zero gas, span gas NO, SO_2, CO, CO_2 and O_2.

(10) Zirconia O_2 sensor: (This is not necessary in case when the zirconia type O_2 sensor is built-in.) External zirconia oxygen sensor used for measuring the oxygen concentration (0 to 25%) in sample gas.

(11) Converter: Added to NOx analyzer. A special catalyst material for efficient conversion of NO_2 gas to NO is used.

*(Note) For each gas sampling device, refer to the separate Data Sheet for each gas sampling device.

CODE SYMBOLS

Digit No. of code

Digit	Description	note	1	2	3	4	5	6	7	8	9	10	11	12	13	14	15	16	17	18	19	20	21	22	23
			Z	K	J	F				4	-					-							-		
4	<Custom specifications>																								
	Standard					F																			
5	<Measurable component (SO_2, CO_2, CO, CH_4, N_2O) >																								
	1st componet / 2nd componet / 3rd componet / 4th componet																								
	NO						P																		
	SO_2						A																		
	CO_2						D																		
	CO						B																		
	CH_4						E																		
	NO / SO_2						F																		
	NO / CO						H																		
	CO_2 / CO						G																		
	NO / SO_2 / CO						L																		
	NO / SO_2 / CO_2 / CO						M																		
	N_2O	note 10					Q																		
	N_2O / CO_2	note 10					R																		
	NO / N_2O / CO_2	note 10					S																		
	SO_2 / N_2O / CO_2	note 10					T																		
	N_2O / CO_2 / CO	note 10					U																		
	CH_4 / N_2O / CO_2	note 10					V																		
	NO / SO_2 / N_2O / CO_2	note 10					W																		
6	<Measurable component (O_2)>																								
	None							Y																	
	External zirconia type O_2 sensor (Model : ZFK7)	note 1b)						A																	
	External O_2 analyzer	note 1a)b)						B																	
	Built-in paramagnetic type O_2 sensor							C																	
7	<Gas inlet/outlet>																								
	Rc1/4								0																
	Rc1/4, with purging	note 2a)							1																
	NPT1/4								2																
	NPT1/4, with purging	note 2a)							3																
	Resin(ø6)	note 2b)							4																
8	<Revision code>									4															
9	<Accessories>																								
	None										Y														
	With relay board for auto caliblation, with cable										A														
	With slide rail										C														
	With slide rail, relay board, and cable										D														
10	<Indication and power supply cable>	note 3																							
	In Japanese, Power cable rated 125V											J													
	In English, Power cable rated 125V (UL)											E													
	In English, Power supply rated 250V (CEE)											U													
11	<Measuring range> 1st component	note 4																							
12	Minimum range / Maximum range																								
	0 to 20ppm / 0 to 500ppm	note 5											1	E											
	0 to 50ppm / 0 to 1000ppm												A	F											
	0 to 100ppm / 0 to 2000ppm												B	G											
	0 to 200ppm / 0 to 500ppm												C	E											
	0 to 200ppm / 0 to 2000ppm												C	G											
	0 to 200ppm / 0 to 5000ppm												C	H											
	0 to 500ppm / 0 to 1%												E	J											
	0 to 1000ppm / 0 to 2%												F	K											
	0 to 2000ppm / 0 to 5%												G	L											
	0 to 5000ppm / 0 to 10%												H	M											
	0 to 1% / 0 to 20%												J	N											
	0 to 2% / 0 to 10%												K	M											
	0 to 2% / 0 to 50%												K	P											
	0 to 10% / 0 to 20%												M	N											
	0 to 10% / 0 to 100%												M	R											
13	<Measuring range> 2nd component	note 4																							
14	Minimum range / Maximum range																								
	None / None														Y	-	Y								
	0 to 50ppm / 0 to 1000ppm														A	-	F								
	0 to 100ppm / 0 to 2000ppm														B	-	G								
	0 to 200ppm / 0 to 500ppm														C	-	E								
	0 to 200ppm / 0 to 2000ppm														C	-	G								
	0 to 200ppm / 0 to 5000ppm														C	-	H								
	0 to 500ppm / 0 to 1%														E	-	J								
	0 to 1000ppm / 0 to 2%														F	-	K								
	0 to 5000ppm / 0 to 10%														H	-	M								
	0 to 1% / 0 to 20%														J	-	N								
	0 to 2% / 0 to 50%														K	-	P								
	0 to 10% / 0 to 20%														M	-	N								
	0 to 10% / 0 to 100%														M	-	R								
15	<Measuring range> 3rd component	note 4																							
16	Minimum range / Maximum range																								
	None / None																	Y	Y						
	0 to 50ppm / 0 to 1000ppm																	A	F						
	0 to 100ppm / 0 to 1000ppm																	B	F						
	0 to 100ppm / 0 to 2000ppm																	B	G						
	0 to 200ppm / 0 to 500ppm																	C	E						
	0 to 200ppm / 0 to 2000ppm																	C	G						
	0 to 200ppm / 0 to 5000ppm																	C	H						
	0 to 500ppm / 0 to 1%																	E	J						
	0 to 1000ppm / 0 to 2%																	F	K						
	0 to 2000ppm / 0 to 5%																	G	L						
	0 to 5000ppm / 0 to 10%																	H	M						
	0 to 1% / 0 to 20%																	J	N						
	0 to 2% / 0 to 10%																	K	P						
	0 to 10% / 0 to 20%																	M	N						
	0 to 10% / 0 to 100%																	M	R						

Digit	Description		note	1 2 3 4 5 6 7 8	9 10 11 12 13	14 15 16 17 18 19 20	21 22 23 ← Digit No. of code
				Z K J F	4 -	-	-
17	<Measuring range> 4th component		note 4				
18	Minimum range	Maximum range					
	None	None				Y Y	
	0 to 50ppm	0 to 1000ppm				A F	
	0 to 100ppm	0 to 2000ppm				B G	
	0 to 200ppm	0 to 500ppm				C E	
	0 to 200ppm	0 to 2000ppm				C G	
	0 to 200ppm	0 to 5000ppm				C H	
	0 to 500ppm	0 to 1%				E J	
	0 to 1000ppm	0 to 2%				F K	
	0 to 5000ppm	0 to 10%				H M	
	0 to 1%	0 to 20%				J N	
	0 to 2%	0 to 50%				K P	
	0 to 10%	0 to 20%				M N	
	0 to 10%	0 to 100%				M R	
19	<O_2 analyzer, 1st range>		note 4				
20	Minimum range	Maximum range					
	None	None				Y Y	
	0 to 5%	0 to 25%				L V	
	0 to 10%	0 to 25%				M V	
	Other					Z Z	
21	<Output>						
	4 to 20mA DC						A
	0 to 1V DC						B
	4 to 20mA DC + Communication function						C
	0 to 1V DC + Communication function						D
22	<O_2 conversion and O_2 average value output>		note 6				
	None		note 7				Y
	With O_2 conversion output						A
	With peak alarm						B
	With O_2 conversion output and peak alarm						C
23	<Adjustment, Range designation>						
	For combustion exhaust gas (specified range)		note 8a)				B
	For combustion exhaust gas						E
	For combustion exhaust gas (specified range) Unit mg/m^3		note 8a)b)				F
	For combustion exhaust gas, Unit mg/m^3		note 8b)				G
	Others		note 9				Z

Note 1 a) When "B" is specified at the 6th digit, O_2 sensor signal has to be set as 0-1V DC linear corresponding to full scale.
b) External Zirconia O_2 sensor and external O_2 analyzer are not included in the scope of supply, and has to be separately ordered.

Note 2 a) When "H", "L" and "M" with purging are specified at 5th digit, only one set of gas inlet/outlet is provided.
In this case, NO_2/NO converter cannot be mounted in between of two measuring cells.
b) Resin coupling with purging cannot be manufactued.

Note 3 Rated voltage and plug type of the attached power cable is different depending on the code "J", "E" and "U" in the 10th digit.
Select appropriate code according to operationg power supply voltage in the final destination.

Note 4 Measuring range can be selected within either the minimum or maximum range.
(Within min. or max. range, you can change the actual range settings locally.)
Initial setting from Fuji factory is Min. range for the 1st range, and Max. range for the 2nd range.
When range preset at Fuji factory is required, please select "specified range" at 23rd digit and inform Fuji of specified range table.
Refer to Table 1, for possible combination of measuring components and ranges in the data sheet.

Note 5 "1E" can be specified at 11th & 12th digits, ONLY for CO_2 measurement.
In this case, be sure to select "with purging" at 7th digit.

Note 6 O_2 conversion is calculated only for NO, SO_2 and CO.
Both average value output after O_2 calculation and O_2 average value output are provided at the same time.
a) Peak count alarm can be added only for CO measurement.

Note 7 When "Y" is specified at the 6th digit, 22nd digit always has to be specified as "Y".

Note 8 a) If you would like Fuji to deliver ZKJ analyzer with specific range setting, select "specified range" and separately inform Fuji of the actual range of each component together with your purchase order.
b) In case that the measurement unit is specified as "mg/m3", it is necessary to select "unit : mg/m^3" (Code "F" or "G") at the 23rd digit.
Please refer to the table shown below for the corresponding range code based on "mg/m^3".

			Corresponding range in mg/m^3 or g/m^3					
	In ppm		NO		SO_2		CO	
Range code	Min. range	Max. range	Min. range	Max. range	Min. range	Max. range	Min. range	Max. range
AF	0-50ppm	0-1000ppm	0-70mg/m^3	0-1300mg/m^3	0-150mg/m^3	0-2800mg/m^3	0-65mg/m^3	0-1250mg/m^3
BG	0-100ppm	0-2000ppm	0-140mg/m^3	0-2600mg/m^3	0-300mg/m^3	0-5500mg/m^3	0-130mg/m^3	0-2500mg/m^3
CH	0-200ppm	0-5000ppm	0-280mg/m^3	0-6600mg/m^3	0-600mg/m^3	0-14g/m^3	0-250mg/m^3	0-6250mg/m^3

Note 9 When "Z" is specified at the 23rd digit, a gas composition table of actual measued gas has to be sent to Fuji together with your purchase order.

Note 10 When only N_2O analyzer is used, make sure not to contain any components other than N_2O .
Multicomponent analyzers including N_2O analyzer + CO_2 analyzer are used for sludge incineration.
In this case, the range of N_2O is 0 to 200ppm/500ppm, and the range of CO_2 is 0 to 10%/20%.

Table 1. Measurable component and range — availability check table —

(1) Components of single-component analyzer and double-component analyzer (NO/CO), and CO of three-component analyzer ($NO/SO_2/CO$)

As shown in the range code, when "P", "A", "D", "B", and "E" are specified at 5th digit, each component is given at 11th and 12th digits. When "H" is specified, NO is given at 11th and 12th digits and CO at 13th and 14th digits. When "L" is specified, CO is given at 15th and16th digits.

	Range code	1E	AF	BG	CH	EJ	FK
Code symbol 5th digit	Range / Components	0-20ppm 0-500ppm	0-50ppm 0-1000ppm	0-100ppm 0-2000ppm	0-200ppm 0-5000ppm	0-500ppm 0-1%	0-1000ppm 0-2%
P,H	NO		○	○	○		
A	SO_2		○	○	○	○	
D	CO_2	○	○	○	○	○	○
B,H,L	CO		○	○	○	○	○
E	CH_4				○	○	○

	Range code	GL	HM	JN	KM	KP	MR	CG
Code symbol 5th digit	Range / Components	0-2000ppm 0-5%	0-5000ppm 0-10%	0-1% 0-20%	0-2% 0-10%	0-2% 0-50%	0-10% 0-100%	0-200ppm 0-2000ppm
P,H	NO							
A	SO_2				○			
D	CO_2	○	○	○		○	○	
B,H,L	CO		○	○		○	○	
E	CH_4	○	○	○		○	○	
Q	N_2O							○

○ : Measurable

(2) NO/SO_2 of double-component analyzer (NO/SO_2), three-component analyzer ($NO/SO_2/CO$) and four-component analyzer ($NO/SO_2/CO_2/CO$)

Selection of NO/SO_2 when "F", "L", and "M" are specified at 5th digit of the code symbol.

		Measurable components	2nd component SO_2		
		Code symbol, 13th, and 14th digits.	AF	BG	CH
Measurable components	Code symbol, 11th, and 12th digits.	2nd / 1st	0-50ppm 0-1000ppm	0-100ppm 0-2000ppm	0-200ppm 0-5000ppm
1st component, NO	AF	0-50ppm 0-1000ppm	○	○	
	BG	0-100ppm 0-2000ppm	○	○	
	CH	0-200ppm 0-5000ppm			○

○ : Combination is available.

(3) CO_2/CO of double-component analyzer (CO_2/CO) and 4-component analyzer (NO/SO_2/CO_2/CO)

When “G” is specified at 5th digit, CO_2 is given at 11th and 12th digits, and CO at 13th and 14th digits.
When “M” is specified, CO_2 is given at 15th and 16th digits, and CO at 17th and 17th digits.

		Measurable components	2nd component, CO								
		Range code	AF	BG	CH	EJ	FK	HM	JN	KP	MR
Measurable components	Range code	2nd / 1st	0-50ppm 0-1000ppm	0-100ppm 0-2000ppm	0-200ppm 0-5000ppm	0-500ppm 0-1%	0-1000ppm 0-2%	0-5000ppm 0-10%	0-1% 0-20%	0-2% 0-50%	0-10% 0-100%
1st component, CO_2	AF	0-50ppm 0-1000ppm	○	○	○						
	BG	0-100ppm 0-2000ppm	○	○	○	○					
	CH	0-200ppm 0-5000ppm	○	○	○	○					
	EJ	0-500ppm 0-1%				○	○				
	FK	0-1000ppm 0-2%					○				
	GL	0-2000ppm 0-5%						○			
	HM	0-5000ppm 0-10%						○	○		
	JN	0-1% 0-20%							○	○	
	KP	0-2% 0-50%								○	
	MP	0-10% 0-100%									○
	MN	0-10% 0-20%	○	○	○	○					

○ : Combination is available.

(4) N_2O/CO_2 of 2-component analyzer N_2O/CO_2, 3-component analyzer NO/N_2O/CO_2, SO_2/N_2O/CO_2, N_2O/CO_2/CO, CH_4/N_2O/CO_2 and 4-component analyzer (NO/SO_2/N_2O/CO_2)

Range code: When code symbol is "R" or "U", N_2O is 11th and 12th digit, CO_2 is 13th and 14th digit.
When code symbol is "S", "T" or "V", N_2O is 13th and 14th digit, CO_2 is 15th and 16th digit
When code symbol is "W", N_2O is 15th and 16th digit, CO_2 is 17th and 18th digit

		Measurable components	2nd component, CO_2
		Range code	MN
Measurable components	Range code		0-10% 0-20%
1st component, N_2O	CE	0-200ppm 0-500ppm	○

○ : Combination is available.

(5) CO_2 range selection of 3-component analyzer (N_2O/CO_2/CO)

Range code: N_2O is 11th and 12th digit, CO_2 is 13th and 14th, CO is 15th and 16th digit.
The range code of CO_2 is "MN".

		Measurable components	2nd component, CO
		Range code	BF
Measurable components	Range code		0-100ppm 0-1000ppm
1st component, N_2O	CE	0-200ppm 0-500ppm	○

○ : Combination is available.

(6) SO_2 range selection of 3-component analyzer ($SO_2/N_2O/CO_2$)

Range code: SO_2 is 11th and 12th digit, N_2O is 13th and 14th, CO_2 is 15th and 16th digit.
The range code of CO_2 is "MN".

		Measurable components	2nd component, N_2O
		Range code	CE
Measurable components	Range code		0-200ppm 0-500ppm
1st component, SO_2	AF	0-50ppm 0-1000ppm	○

○ : Combination is available.

(7) CH_4 range selection of 3-component analyzer ($CH_4/N_2O/CO_2$)

Range code: CH_4 is 11th and 12th digit, N_2O is 13th and 14th, CO_2 is 15th and 16th digit.
The range code of CO_2 is "MN".

		Measurable components	2nd component, N_2O
		Range code	CE
Measurable components	Range code		0-200ppm 0-500ppm
1st component, CH_4	CH	0-200ppm 0-5000ppm	○

○ : Combination is available.

(8) $NO/SO_2/N_2O$ and 4-component analyzer ($NO/SO_2/N_2O/CO_2$)

Range code: NO is 11th and 12th digit, SO_2 is 13th and 14th, N_2O is 15th and 16th , CO_2 is 17th and 18th digit.
The range code of CO_2 is "MN".

		Measurable components	2nd component, SO_2	3nd component, N_2O
		Range code	AF	CE
Measurable components	Range code		0-50ppm 0-1000ppm	0-200ppm 0-500ppm
1st component, NO	AF	0-50ppm 0-1000ppm	○	○
	BG	0-100ppm 0-2000ppm	○	○

○ : Combination is available.

OUTLINE DIAGRAM (Unit: mm)

<Analyzer main unit>

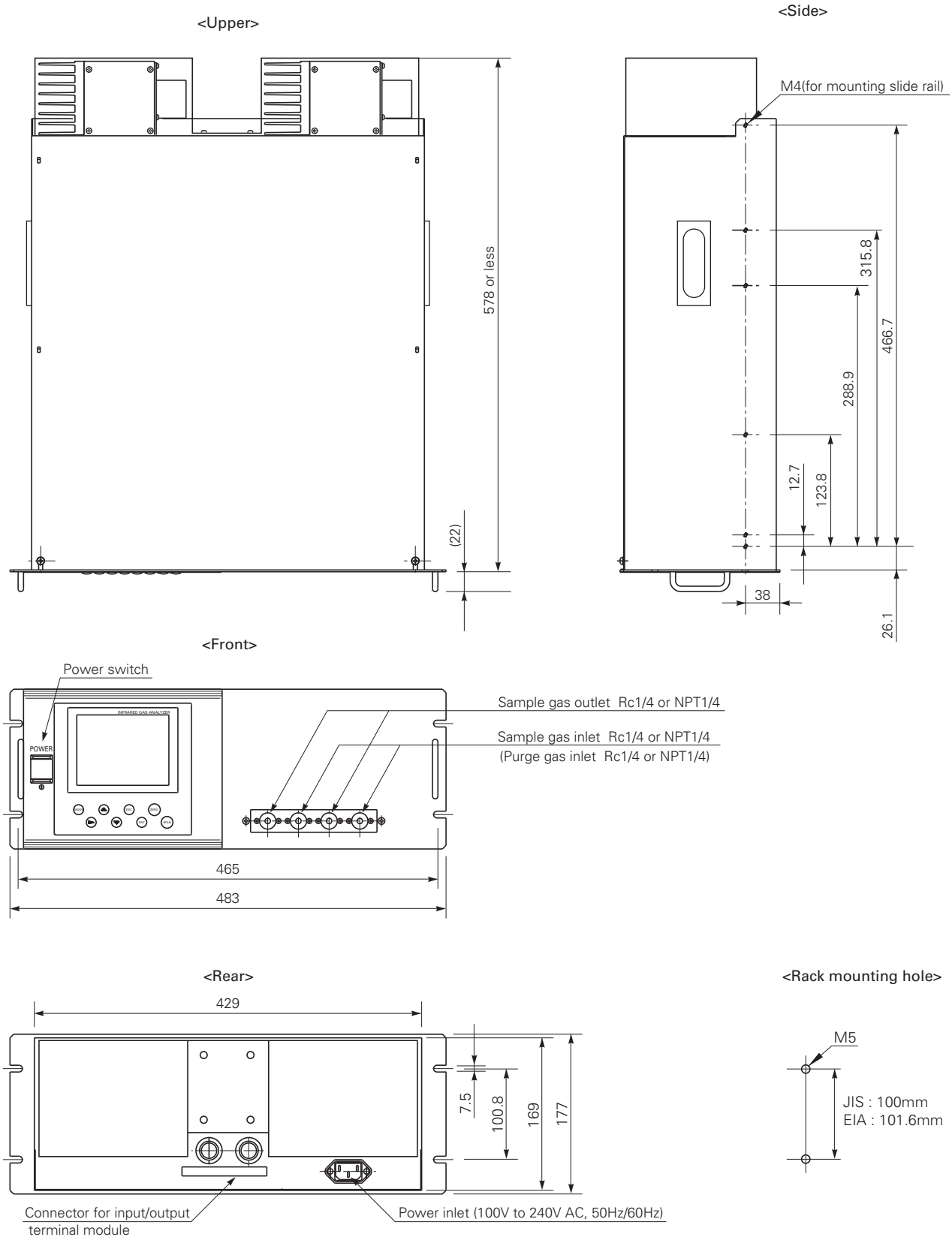

<Input / output terminal module>

(Accessory)

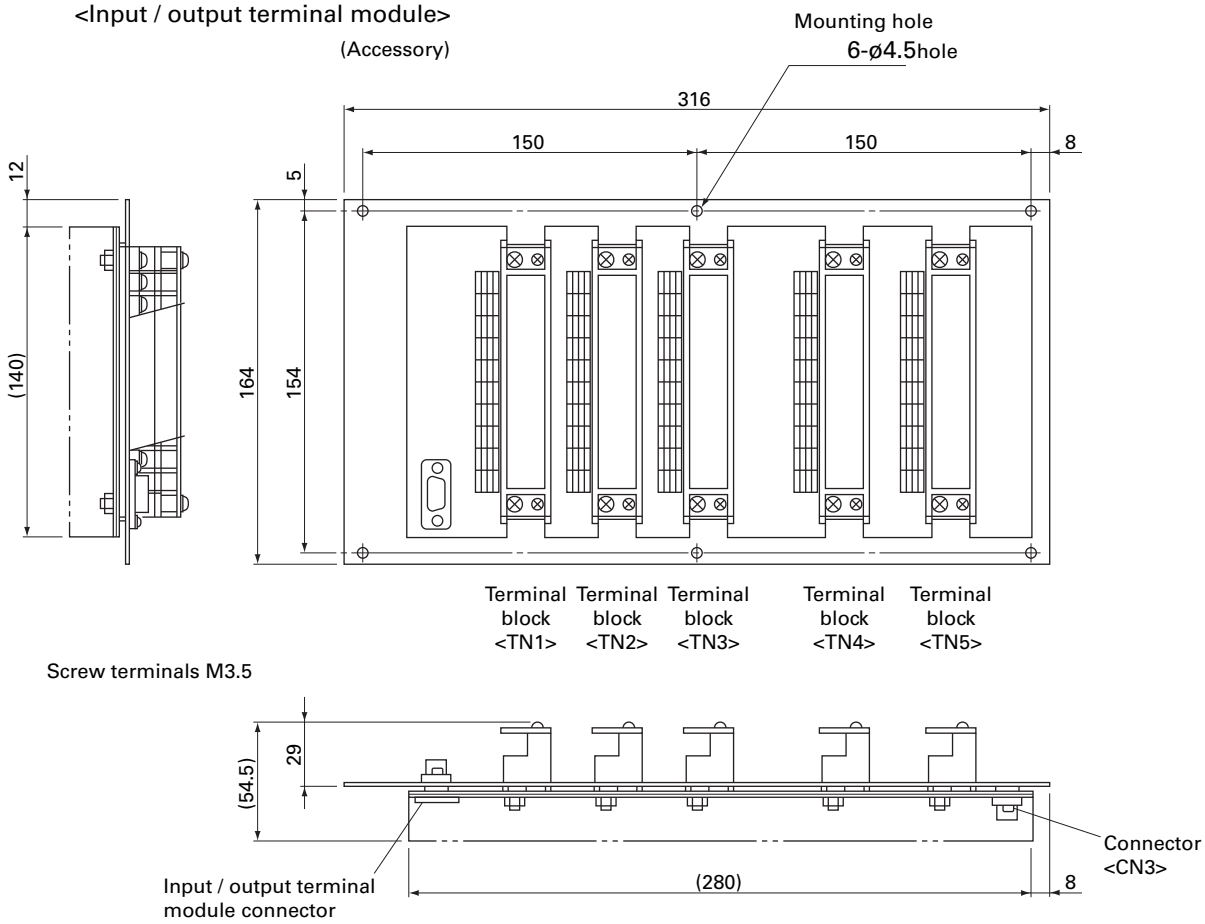

<Cable for connecting input / output terminal>

(Accessory)

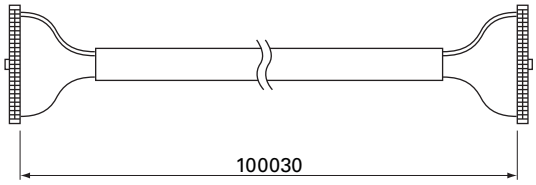

<Dimensions for mounting input / output terminal module>

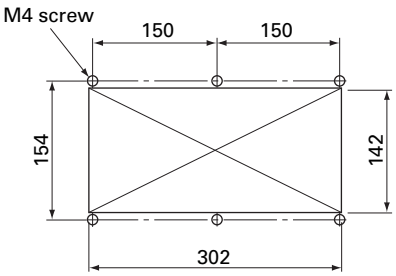

Cut M4 screw holes at 6 positions.
Drill a rectangular hole of 302 × 142mm or more in the center.

OUTLINE DIAGRAM OF ACCESSORY SLIDE RAIL (Unit: mm)

* The slide rails are attached to this equipment when designated.

Model : 305A-24/Accuride International Inc. compatible.

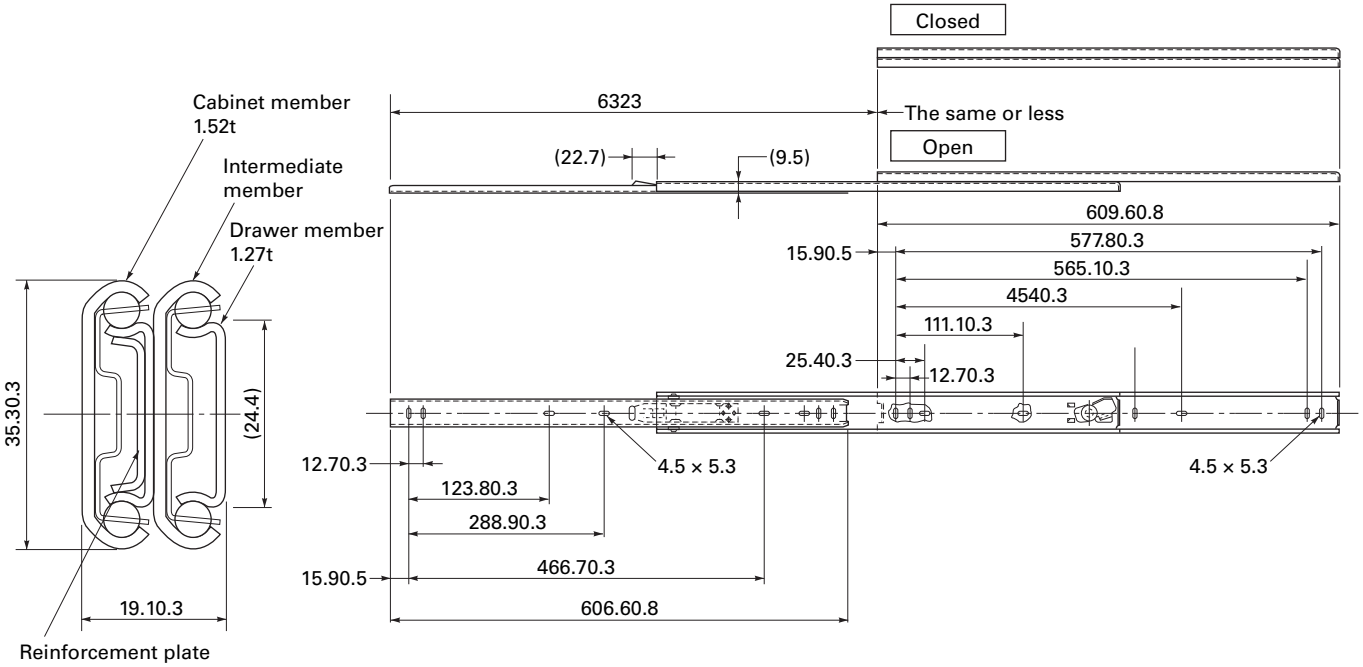

19-inch rack mounting method:

The mass of the instrument should be supported at the bottom of the unit (or the side of the unit when mounted with the slide rails).

Also, for facilitate maintenance, a structure which allows extraction of the main unit by using the slide rail is recommended.

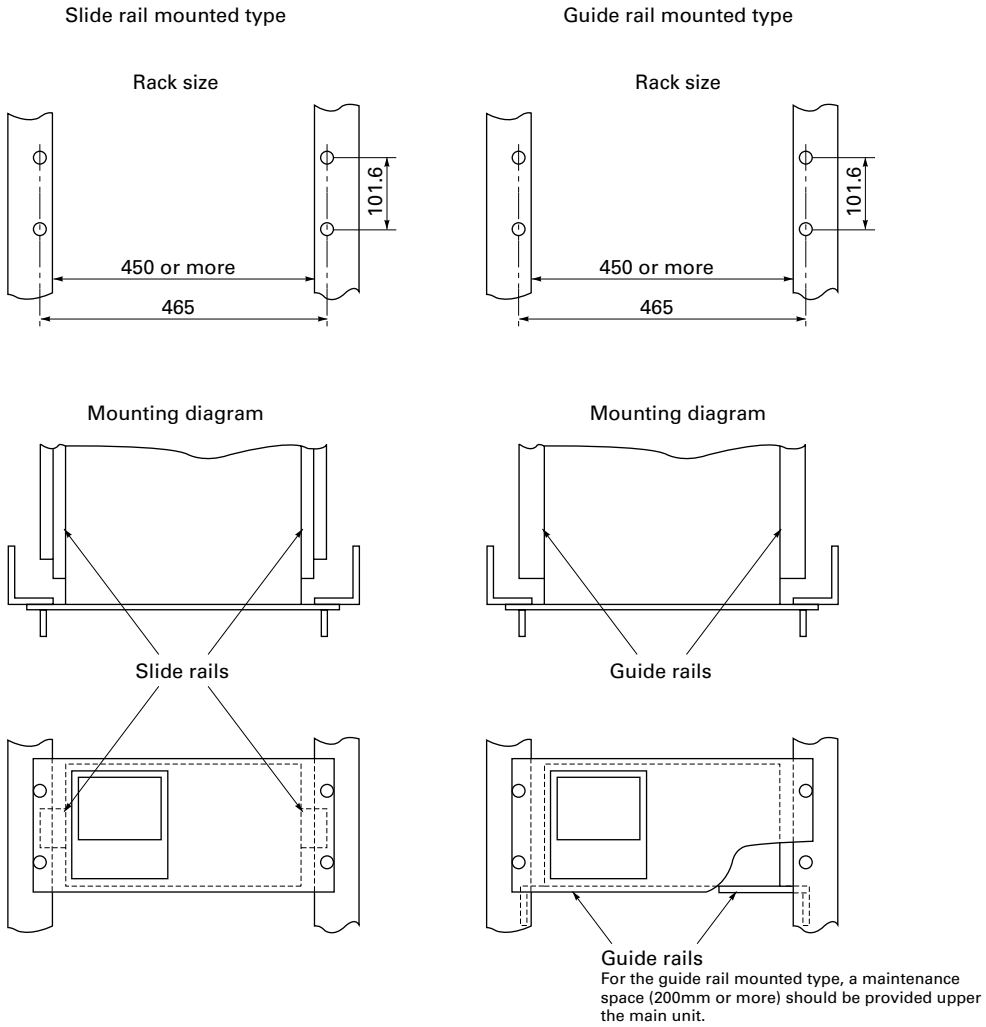

EXTERNAL CONNECTION DIAGRAM

Terminal block 1
<TN1>

Ch5 output (Ch5_OUT)	1	11	Ch10 output (Ch10_OUT)
	2	12	
Ch4 output (Ch4_OUT)	3	13	Ch9 output (Ch9_OUT)
	4	14	
Ch3 output (Ch3_OUT)	5	15	Ch8 output (Ch8_OUT)
	6	16	
Ch2 output (Ch2_OUT)	7	17	Ch7 output (Ch7_OUT)
	8	18	
Ch1 output (Ch1_OUT)	9	19	Ch6 output (Ch6_OUT)
	10	20	

(M3.5 screw)

Terminal block 2
<TN2>

O_2 sensor input (*) (O_2_IN)	1	11	Ch5 remote range Changeover input (R_RNG_Ch5)
	2	12	
Ch12 output (Ch12_OUT)	3	13	Ch4 remote range Changeover input (R_RNG_Ch4)
	4	14	
Ch11 output (Ch11_OUT)	5	15	Ch3 remote range Changeover input (R_RNG_Ch3)
	6	16	
Unassigned	7	17	Ch2 remote range Changeover input (R_RNG_Ch2)
	8	18	
Unassigned	9	19	Ch1 remote range Changeover input (R_RNG_Ch1)
	10	20	

(M3.5 screw)

* : For external O_2 sensor input.

Terminal block 3
<TN3>

Unassigned	1	11	Ch5 range identification signal output (RNG_IDCh5)
	2	12	
Unassigned	3	13	Ch4 range identification signal output (RNG_IDCh4)
	4	14	
Remote hold input (R_HOLD)	5	15	Ch3 range identification signal output (RNG_IDCh3)
	6	16	
Average value reset input (RESET)	7	17	Ch2 range identification signal output (RNG_IDCh2)
	8	18	
Auto calibration remote start input (R_CAL)	9	19	Ch1 range identification signal output (RNG_IDCh1)
	10	20	

(M3.5 screw)

Terminal block 4
<TN4>

Peak count alarm output (PEAK_ALM)	1	11	Unassigned
	2	12	
Auto calibration status contact output (ACAL/MNT)	3	13	Unassigned
	4	14	
Pump ON/OFF (PUMP)	5	15	Unassigned
	6	16	
Calibration error contact output (CAL_ALM)	7	17	Unassigned
	8	18	
Instrument error contact output (FAULT)	9	19	Unassigned
	10	20	

(M3.5 screw)

Terminal block 5
<TN5>

Unassigned	1	11	Unassigned
Alarm3 output (ALM_3)	2	12	Alarm6 output (ALM_6)
	3	13	
	4	14	
Alarm3 output (ALM_2)	5	15	Alarm5 output (ALM_5)
	6	16	
	7	17	
Alarm1 output (ALM_1)	8	18	Alarm4 output (ALM_4)
	9	19	
	10	20	

(M3.5 screw)

Connector
<CN3>
Solenoid valve drive signal output for calibration

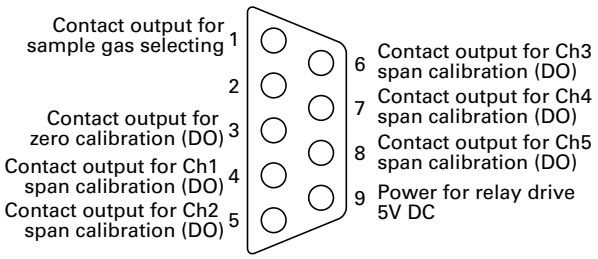

<D-sub 9P>

Connector
<CN2>
For serial communicetion

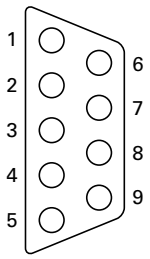

Note 1) Unassigned terminals are used for internal connection.
So they should not be used as repeating terminals either.

Note 2) The allocation of eaCh Channel (Ch1 to Ch12) depends on measured gas components. Refer to the table on the next page.

Dedicated relay board

This relay board receives signals from connector CN3 of the ZKJ I/O terminal module and activates the calibration solenoid valve directly.

- Relay contact : 1 normally closed contact
  Contact capacity; 250V/2A AC
  (resistive load)

OUTLINE DIAGRAM (Unit: mm)

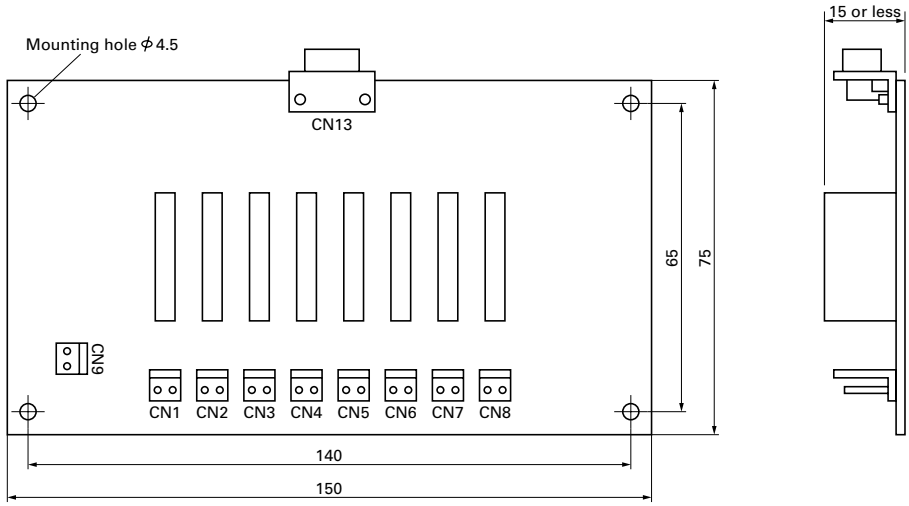

CONNECTIONS

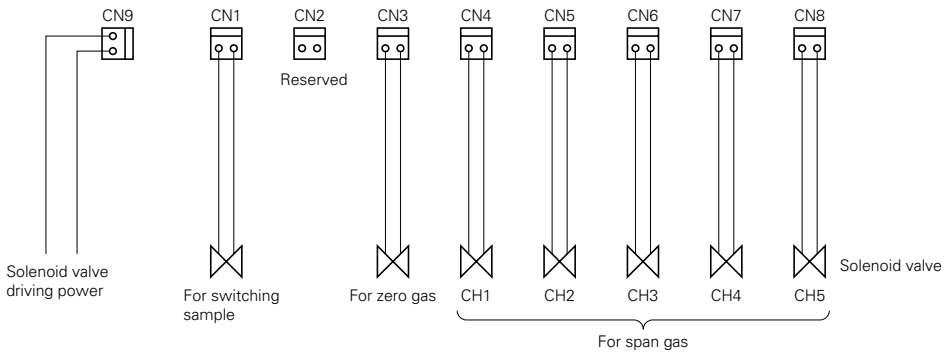

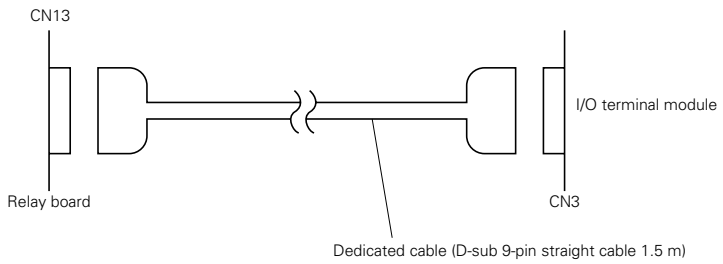

Recommended connector

- CN1 to CN9 : Housing ; VHR-2N
  (Nihon Solderless Terminal)
  Contact ; SVH-21T-1.1
  (Nihon Solderless Terminal)

Contact action

- During measurement : CN1 ; ON
  Others ; OFF
- During calibration : CN1 ; OFF
  Others ; Contact corresponding to calibration timing is ON

Table 2. Correspondence between measurement channels and measured value

The following table gives measurement channels and their contents according to the code symbols.

Code symbol			Contents
5th digit	6th digit	22nd digit	
P	Y	Y	Ch1: NO
A	Y	Y	Ch1: SO_2
D	Y	Y	Ch1: CO_2
B	Y	Y	Ch1: CO
E	Y	Y	Ch1: CH_4
F	Y	Y	Ch1: NO, Ch2: SO_2
H	Y	Y	Ch1: NO, Ch2: CO
G	Y	Y	Ch1: CO_2, Ch2: CO
L	Y	Y	Ch1: NO, Ch2: SO_2, Ch3: CO
M	Y	Y	Ch1: NO, Ch2: SO_2, Ch3: CO_2, Ch4: CO
P	A, B, C	A	Ch1: NO_X, Ch2: O_2, Ch3: Converted NO_X, Ch4: Converted NO_X average, Ch5: O_2 average
A	A, B, C	A	Ch1: SO_2, Ch2: O_2, Ch3: Converted SO_2, Ch4: Converted SO_2 average, Ch5: O_2 average
B	A, B, C	A	Ch1: CO, Ch2: O_2, Ch3: Converted CO, Ch4: Converted CO average, Ch5: O_2 average
F	A, B, C	A	Ch1: NO_X, Ch2: SO_2, Ch3: O_2, Ch4: Converted NO_X, Ch5: Converted SO_2, Ch6: Converted NO_X average, Ch7: Converted SO_2 average, Ch8: O_2 average
H	A, B, C	A	Ch1: NO_X, Ch2: CO, Ch3: O_2, Ch4: Converted NO_X, Ch5: Converted CO, Ch6: Converted NO_X average, Ch7: Converted CO average, Ch8: O_2 average
G	A, B, C	A	Ch1: CO_2, Ch2: CO, Ch3: O_2, Ch4: Converted CO, Ch5: Converted CO average, Ch6: O_2 average
L	A, B, C	A	Ch1: NO_X, Ch2: SO_2, Ch3: CO, Ch4: O_2, Ch5: Converted NO_X, Ch6: Converted SO_2, Ch7: Converted CO, Ch8: Converted NO_X average, Ch9: Converted SO_2 average, Ch10: Converted CO average, Ch11: O_2 average
M	A, B, C	A	Ch1: NO_X, Ch2: SO_2, Ch3: CO_2, Ch4: CO, Ch5: O_2, Ch6: Converted NO_X, Ch7: Converted SO_2, Ch8: Converted CO, Ch9: Converted NO_X average, Ch10: Converted SO_2 average, Ch11: Converted CO average, Ch12: O_2 average
B	A, B, C	B	Ch1: CO, Ch2: O_2
H	A, B, C	B	Ch1: NO, Ch2: CO, Ch3: O_2
G	A, B, C	B	Ch1: CO_2, Ch2: CO, Ch3: O_2
L	A, B, C	B	Ch1: NO, Ch2: SO_2, Ch3: CO, Ch4: O_2
M	A, B, C	B	Ch1: NO, Ch2: SO_2, Ch3: CO_2, Ch4: CO, Ch5: O_2
B	A, B, C	C	Ch1: CO, Ch2: O_2, Ch3: Converted CO, Ch4: Converted CO average, Ch5: O_2 average
H	A, B, C	C	Ch1: NO_X, Ch2: CO, Ch3: O_2, Ch4: Converted NO_X, Ch5: Converted CO, Ch6: Converted NO_X average, Ch7: Converted CO average, Ch8: O_2 average
G	A, B, C	C	Ch1: CO_2, Ch2: CO, Ch3: O_2, Ch4: Converted CO, Ch5: Converted CO average, Ch6: O_2 average
L	A, B, C	C	Ch1: NO_X, Ch2: SO_2, Ch3: CO, Ch4: O_2, Ch5: Converted NO_X, Ch6: Converted SO_2, Ch7: Converted CO, Ch8: Converted NO_X average, Ch9: Converted SO_2 average, Ch10: Converted CO average, Ch11: O_2 average
M	A, B, C	C	Ch1: NO_X, Ch2: SO_2, Ch3: CO_2, Ch4: CO, Ch5: O_2, Ch6: Converted NO_X, Ch7: Converted SO_2, Ch8: Converted CO, Ch9: Converted NO_X average, Ch10: Converted SO_2 average, Ch11: Converted CO average, Ch12: O_2 average
Q	Y	Y	Ch1:N_2O
R	Y	Y	Ch1:N_2O, Ch2:CO_2
S	Y	Y	Ch1:NO, Ch2:N_2O, Ch3:CO_2
T	Y	Y	Ch1:SO_2, Ch2:N_2O, Ch3:CO_2
U	Y	Y	Ch1:N_2O, Ch2:CO_2, Ch3:CO
V	Y	Y	Ch1:CH_4, Ch2:N_2O, Ch3:CO_2
W	Y	Y	Ch1:NO, Ch2:SO_2, Ch3:N_2O, Ch4:CO_2
S	A, B, C	Y	Ch1:NO, Ch2:N_2O, Ch3:CO_2,Ch4:O_2
T	A, B, C	Y	Ch1:SO_2, Ch2:N_2O, Ch3:CO_2,Ch4:O_2
U	A, B, C	Y, B	Ch1:N_2O, Ch2:CO_2, Ch3:CO, Ch4:O_2
V	A, B, C	Y	Ch1:CH_4, Ch2:N_2O, Ch3:CO_2,Ch4:O_2
W	A, B, C	Y	Ch1:NO, Ch2:SO_2, Ch3:N_2O, Ch4:CO_2, Ch5:O_2
S	A, B, C	A	Ch1:NOx, Ch2:N_2O, Ch3:CO_2, Ch4:O_2, Ch5:Converted NOx, Ch6:Converted NOx average, Ch7:O_2 average
T	A, B, C	A	Ch1:SO_2, Ch2:N_2O, Ch3:CO_2,Ch4:O_2, Ch5:Converted SO_2, Ch6:Converted SO_2 average, Ch7:O_2 average
U	A, B, C	A, C	Ch1:N_2O, Ch2:CO_2, Ch3:CO, Ch4:O_2, Ch5:Converted CO, Ch6:Converted CO average, Ch7:O_2 average
V	A, B, C	A	Ch1:CH_4, Ch2:N_2O, Ch3:CO_2,Ch4:O_2,Ch5:O_2 average
W	A, B, C	A	Ch1:NOx, Ch2:SO_2, Ch3:N_2O, Ch4:CO_2, Ch5:O_2, Ch6:Converted NOx, Ch7:Converted SO_2, Ch8:Converted NOx average, Ch9:Converted SO_2 average, Ch10:O_2 average

note

Exclusive Zirconia O_2 Sensor (to be purchased separately)

For O_2 correction, the gas analyzer ZKJ can accept linealized 0 to 1V DC signal coming from analyzer calibrated 0 to 25% O_2 full scale. If the analyzer is not available, Fuji can supply exclusive Zirconia O_2 sensor Model ZFK.

Measuring method:
Zirconia system

Measurable component and measuring range:

Measurable component		Range
O_2	Oxygen	0 to 25vol%

Repeatability: Within ± 0.5% of full scale
Linearity: Within ± 1% of full scale
Zero drift: Within ± 1% of full scale/week
Span drift: Within ± 2% of full scale/week
Response time: Approx. 20 seconds (for 90% response)
Measured gas flow rate:
0.5 ± 0.25L / min
Remark: The Zirconia system, due to its principle, may produce a measuring error due to relative concentration versus the com-bustible O_2 gas concentration. Also, a corrosive gas (SO_2 of 250 ppm or more, etc.) may affect the life of the sensor.

Gas inlet/outlet size:
Rc1/4 or NPT1/4

Power supply: Rated voltage ; 100 to 115V AC or 200 to 240V AC
Rated frequency ; 50Hz/60Hz
Max. rated power ; 215VA (during power ON)
65VA (during steady-state operation)

Enclosure: Steel casing, for indoor application
Indication: Temperature indication (LED)
Temperature alarm output:
Contact output 1a contact,
Contact capacity 220V, 1A AC (resistive load)

Outer dimensions (H x W x D):
141 x 170 x 190mm
Mass {weight}: Approx. 3kg
Finish color: Munsell 5Y 7/1

CODE SYMBOLS

1	2	3	4	5	6	7	8		9	10	11	12	13	Description
Z	F	K	7	Y	Y		4	-		Y	0	Y	Y	
			7YY											**Measuring method**
														Zirconia method
						9								**Power supply**
														100 to 115V AC 50/60Hz(Standard)
						B								200 to 240V AC 50/60Hz(Standard)
						C								200 to 240V AC 50/60Hz(CE mark)
									1					**Gas inlet/outlet size**
														Rc 1/4
									8					NPT 1/4

SCOPE OF DELIVERY

- Gas analyzer ... 1 unit
- Input /output terminal module for external mounting ... 1 set
- Connection cable (1m) between main unit and input / output terminal module ... 1 pc
- Power cable (standard inlet type 2m) ... 1 pc
- Spare fuses (250V, 3.15A AC, delay type) ... 2 pcs
- Instruction manual ... 1 copy
- Slide rails ... 2 pcs (when with slide rails are selected)
- Relay board ... 1 pc (when with relay board are selected)
- Ceble foe relay board ... 1 pc (when with relay board are selected)

ORDERING INFORMATION

1. Code symbols
2. Application and composition of sample gas

Items to be prepared separately

- Various sampling devices (refer to Data Sheets for the sampling devices)
- Dedicated zirconia O_2 sensor (see Page 16)

OUTLINE DIAGRAM (Unit:mm)

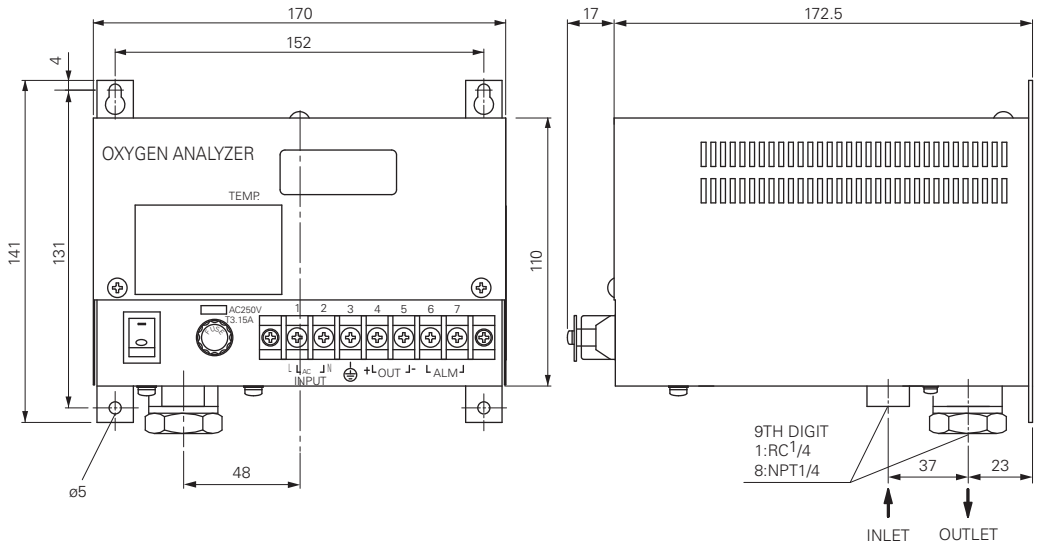

EXTERNAL CONNECTION DIAGRAM

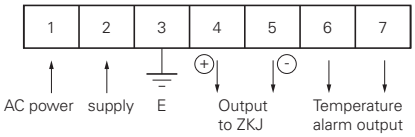

⚠ Caution on Safety

*Before using this product, be sure to read its instruction manual in advance.

Fuji Electric Co., Ltd.

International Sales Div
Sales Group
Gate City Ohsaki, East Tower, 11-2, Osaki 1-chome,
Shinagawa-ku, Tokyo 141-0032, Japan
http://www.fujielectric.com
Phone: 81-3-5435-7280, 7281 Fax: 81-3-5435-7425
http://www.fjielectric.com/products/instruments/

Information in this catalog is subject to change without notice.

Printed in Japan