VFC08

RING COMPRESSOR

The VFC08 is a single-stage ring compressor with a maximum pressure of 19.5 in. H_2O, a maximum vacuum of 18.7 in. H_2O, and a maximum capacity of 19.5 SCFM. It comes complete with a direct-drive, 1/10 horsepower, TEFC motor capable of operating on a wide range of voltages and on 50 or 60 Hz. A pilot-duty thermal protector is standard equipment on all 3-phase models, and built-in automatic reset thermal protectors on 1-phase units. All versions have NEMA class B insulation, are UL recognized, CSA certified and CE.

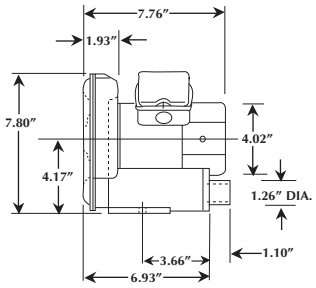

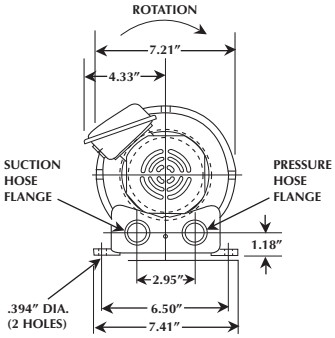

SPECIFICATIONS

	Model No.	Hz	Voltage	Amps (Max. Rated)	Amps (Locked Rotor)	Max. Pressure	Max. Vacuum	Max. Airflow	Min. Airflow	Max. Temp Rise (ΔT)	Weight
			Low Voltage/High Voltage			in. H_2O	in. H_2O	SCFM	SCFM	°F(°C)	lbs.(kg)
1 Phase	VFC084P-5T	60	115/230	1.2/0.6	3.4/1.7	19.5	18.7	19.5	0	54(30)	13.3(6.0)
		50	110/220	1.1/0.5	3.2/1.6	15	14.4	16.5	0	36(20)	
3 Phase	VFC084A-2T	60	200-240	0.42-0.40	1.8-2.1	19.5	18.7	19.5	0	54(30)	
		50	190-230	0.37-0.32	1.8-2.1	15	14.4	16.5	0	36(20)	
	VFC084A-4W	60	400-480	0.21-0.20	0.9-1.1	19.5	18.7	19.5	0	54(30)	
		50	380-460	0.18-0.16	0.9-1.1	15	14.4	16.5	0	36(20)	

ACCESSORIES

Description	Vacuum Relief Valve	Pressure Relief Valve	Inlet Filter	Inlet Filter Cover	Inlet Filter/Receiver	Exhaust Silencer/Muffler
Model No.	Not Req'd	Not Req'd	F-123	C-123	R15P1.5	VFY-021A

NOTE: Maximum allowable time at deadhead is unlimited

VFC08 PERFORMANCE DATA

KEY
60 Hz
50 Hz

PRESSURE

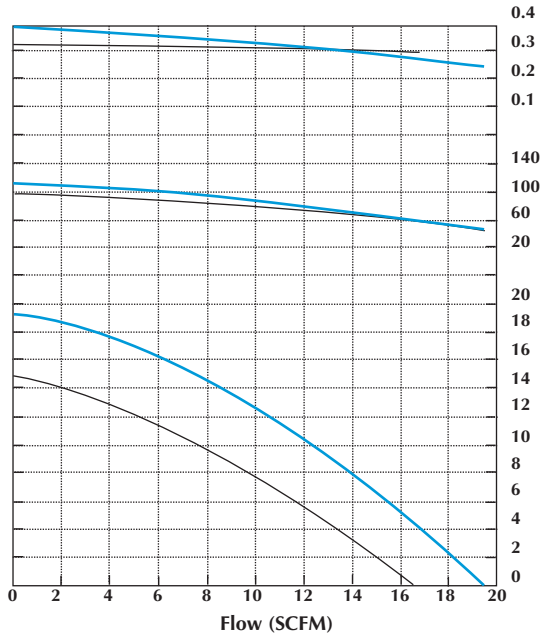

VACUUM

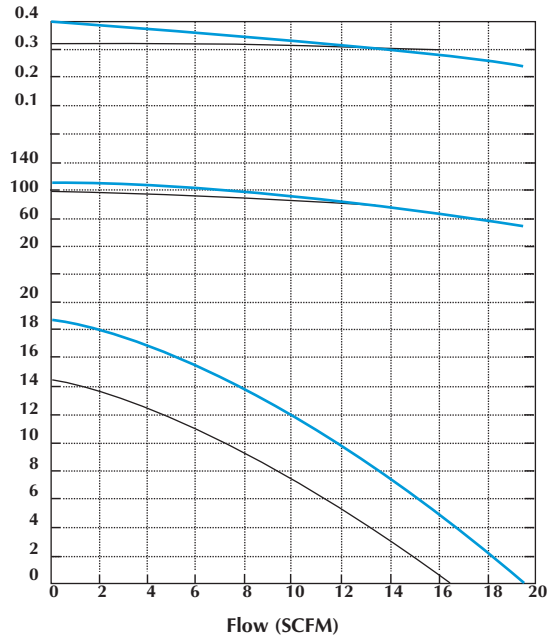

TEMPERATURE RISE

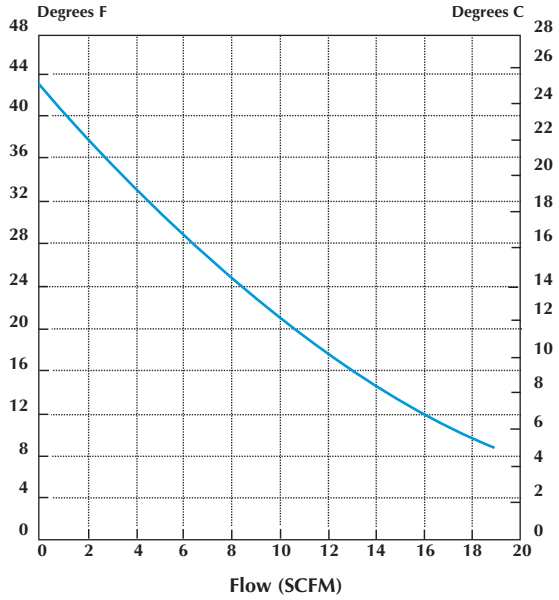

SOUND LEVEL

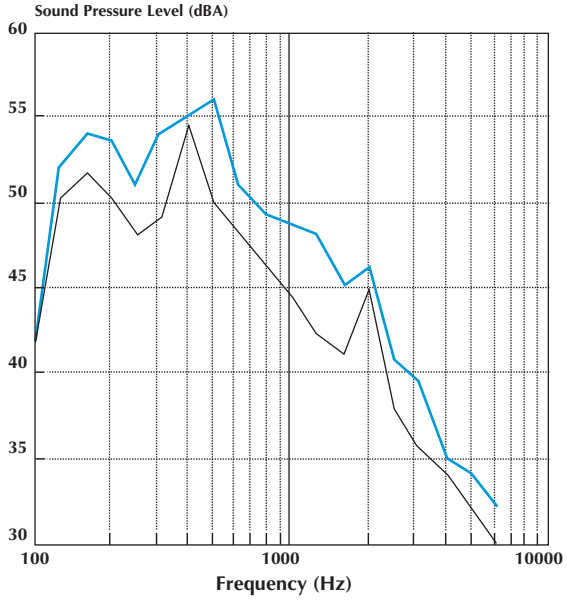

*Measured at distance of 1.0 meters