Achievements and Future Outlook

Powerful Component-Based Solutions Creating Customer Value

EGUCHI, Naoya
Corporate General Manager, Corporate R&D Headquarters
Executive Officer, Fuji Electric Co., Ltd.

1. Introduction

Fuji Electric has formulated the brand statement "Innovating Energy Technology" based on its concept of realizing a safe, secure and sustainable society through the pursuit of innovation in energy and environmental technology. With the attaining of this goal in mind, Fuji Electric has been concentrating its research resources on developing technologies for supplying and using electrical energy safely, securely and efficiently and technologies for utilizing thermal energy with no loss. It has also been working to develop a technology for optimally controlling these technologies. In our Medium-Term Management Plan for 2013, we described our research policy for providing energy solutions. This policy positions our power semiconductors and power electronics as core technologies, while also developing our thoroughly differentiated components, which include measurement and thermal components. The purpose is to create a platform and package for our control technologies based on our core technologies and components (see Fig. 1). This paper introduces our latest developments based on this policy.

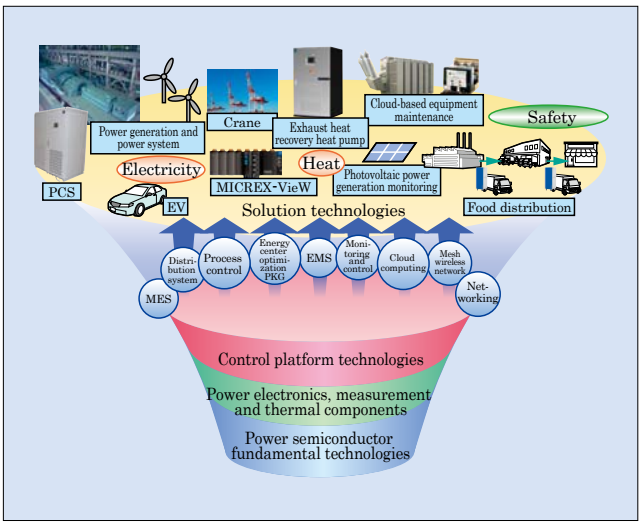

Fig.1 Fuji Electric's core technology and areas of focus

2. Synergy of Power Semiconductor and Power Electronics Technologies

The power semiconductor technology and power electronics technology are the core technologies of Fuji Electric. We aim to achieve thorough differentiation by making use of the synergy between these technologies. And we are focusing on developing silicon carbide (SiC) power semiconductors as next-generation devices capable of exceeding the physical limitations of Si devices and dramatically reducing loss. We are also making an effort to develop power electronics components that use these semiconductors.

Our Matsumoto Factory is our manufacturing base for power semiconductors, and it has a 6-inch wafer processing line launched as the first SiC manufacturing facilities in the industry. We use it to mass-produce 600- to 1,700-V withstand voltage Schottky barrier diodes (SBDs) and 1,200-V withstand voltage metal-oxide-semiconductor field-effect transistors (MOSFETs) developed jointly with the National Institute of Advanced Industrial Science and Technology. At the same time, we are also developing various ultra-small, highly reliable modules characterized by high-temperature operation, heat dissipation and low inductance. The aim is to use them for maximizing the performance of SiC devices.

By utilizing a SiC-SBD in a free wheeling diode (FWD), we have developed and are supplying the market with a hybrid module that applies Fuji Electric's 6th-generation "V Series" to the insulated-gate bipolar transistor (IGBT) chip.

In addition to the 1,200-V and 1,700-V withstand voltage products, we have commercialized a 1,700-V withstand voltage hybrid module for electric railways driven with a low carrier frequency. In order to ensure high reliability, it uses AlSiC, a composite material of aluminum and silicon carbide, as the base material and aluminum nitride (AlN) featuring high thermal conductivity for the insulating substrate material. When applied to an inverter, it achieves lower loss than Si module by 32% (with a carrier frequency of 3 kHz)[1]. Furthermore, we have also developed a product featuring an even higher withstand voltage:

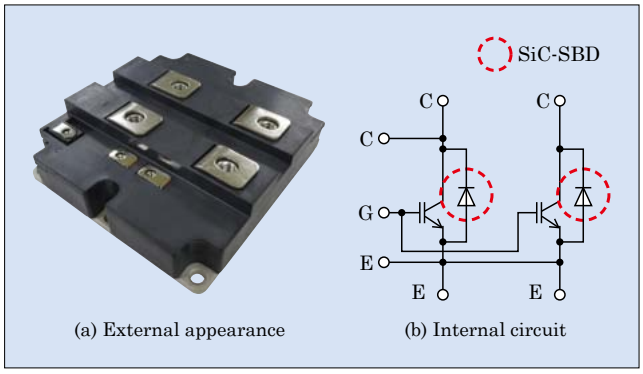

Fig.2 3,300-V withstand voltage SiC hybrid module

a 3,300-V withstand voltage hybrid module[2] (see Fig. 2). The SiC-SBD used for this module has been jointly developed with a joint research body, the Tsukuba Power-Electronics Constellations (TPEC). To enhance reliability, this module uses Sn-Sb solder under the chip, thereby improving the continuous operating temperature to 150 °C from 125 °C of Si-IGBT modules and achieving a module footprint reduction of approximately 30% from a current Si product. When employed to an inverter, it is capable of reducing the loss by 38% from a Si module (with a carrier frequency of 10 kHz).

For the Tokaido Shinkansen trains, we have developed jointly with Central Japan Railway Company a traction converter that uses SiC power semiconductor modules. The aim is to reduce its energy consumption, size and weight (see Fig. 3). SiC power semiconductor modules generate less heat than conventional Si power semiconductor modules, which allows the cooling mechanism of traction converters to be simplified. It also leads to a reduction in size and weight and energy saving for drive systems including traction converters. The running test carried out with SiC power semiconductor modules employed for a drive system of a high-speed railway is the first one in the world.

We have developed a SiC-MOSFET with even better reliability for inverters and combined it with SiC-SBD to develop an all-SiC module. By making use of the low-loss feature of this module, we have developed a dustproof and waterproof inverter with a totally enclosed self-cooled structure (see Fig. 4). This inverter can be installed in an environment where it is exposed

Fig. 3 Traction converter for Tokaido Shinkansen trains

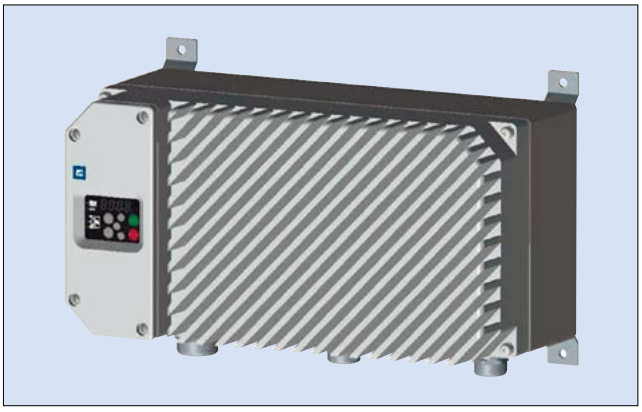

Fig.4 Dustproof and waterproof inverter with totally enclosed self-cooled structure

to dust, water, oil, etc., which was difficult to do in the past. To allow distributed installation in the vicinity of multiple motors in a production line, it is equipped with various functions including functional safety, customizable logic and open network options, and it is expected to contribute to energy saving of plants.

In addition, a backup power supply system for servers that uses SiC-SBDs has been commercialized (see Fig. 5). While power was conventionally supplied as AC to server racks, this system converts power into DC before supplying it. In addition to the loss reduction achieved by employing SiC-SBDs in the converter, the number of power conversions has been decreased from the conventional three to one. This makes it possible to improve the efficiency from the conventional 84% to 92% and reduce power loss to about half. It provides a solution to the issue of more power being consumed in data centers due to the enhanced performance and increased capacity of servers.

We are also developing a SiC trench MOSFET, which is capable of further reducing loss. With SiC, the mobility (on-state resistance) and avalanche breakdown (withstand voltage) characteristics vary depending on the crystallographic orientation and it was difficult to predict characteristics with a conventional simulation. As a project of the TPEC, we built a high-accuracy

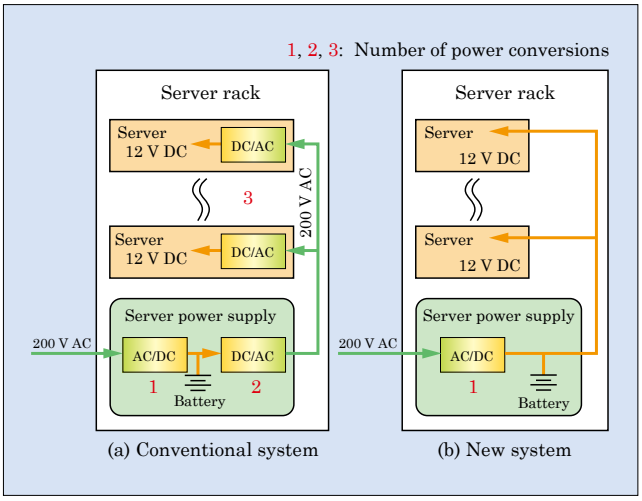

Fig.5 Backup power supply system for servers

simulation model providing results that agree well with the actual measurements for both on-state resistance and withstand voltage. This was done by introducing a model that accommodates the trench orientation, taking into account the lateral electric field and optimizing parameters[3]. By making use of this simulation technology, we have designed the optimum SiC trench MOSFET structure.

As mentioned so far, we are combining our latest SiC devices and module technologies, which maximize the performance of these devices. At the same time, we are developing compact, low-loss and differentiated power electronics products that are equipped with these devices. By doing this, we are aiming to produce the world's top level SiC devices and applicable products.

With conventional Si devices, we have developed the 7th-generation "X Series" of IGBT modules that achieve further miniaturization, loss reduction and high reliability.

With the 7th-generation IGBT chips, we have reduced the thickness of the drift layer and used smaller design rules for and optimization of the surface trench gate structure. These have significantly improved the trade-off relationship between the on-state voltage and turn-off loss. They have been used for SiC hybrid modules, where heat dissipation has been improved by developing a new slim and high-thermal-conductive AlN insulation substrate, and power cycle capability has been improved by using high-strength solder and optimizing wire bonding design. Furthermore, by employing a silicone gel with improved heat resistance, the X Series of IGBT modules have achieved a continuous operating temperature of 175 °C, where this was conventionally 150 °C. This leads to an increase of approximately 35% in output current with the same size and contributes to smaller and more efficient power electronics equipment.

We are working to develop differentiated power electronics products efficiently in a short time by maximizing the performance of these characteristic power semiconductors and bring them to the market in a timely manner; and to accomplish this, we are developing power electronics platforms synchronized with the development cycle of power semiconductors. By using the general-purpose inverter "FRENIC-Ace" marketed in FY2012 as the platform, we have developed in a short time and brought to the market the air-conditioning inverter "FRENIC-eHVAC" for the Asian market and the inverter for elevators "FRENIC-Lift" for the European market.

In a similar way, we are working on the development of a power electronics platform that uses new devices such as SiC devices and the X Series IGBT modules.

3. Electric Distribution, Switching and Control Devices and Instrumentation, Control and Thermal Components

Regarding electric distribution, switching and control devices, we have developed the "F-MPC Web unit" (UM12-10), an energy monitoring device contributing to energy saving of manufacturing facilities, office buildings and commercial facilities. It is installed in factories and buildings, and gathers and accumulates various measurements such as those related to electricity, water, gas and temperature. It is equipped with the Web server function of internally creating Web pages for monitoring the measurements on a PC or other device. It also functions as a controller that provides demand control. The sequence control function for air-conditioning, lighting and other load units has also been provided. It is equipped with a USB host function, an SD card interface and an expansion slot for an additional unit, thereby significantly enhancing scalability as compared with conventional products. For communication with instrumentation equipment, it is compatible with the MODBUS RTU protocol and Ethernet-supported devices in addition to the dedicated protocol of Fuji Electric's "F-MPC Series." This allows data to be gathered from a wide range of instrumentation equipment including the products of other companies (see Fig. 6). To simplify system construction, an automatic search function has been provided for the connected instrumentation equipment so as to automate configuration. For communication with host devices, versatility has been improved by providing compatibility with PLC loader commands and MODBUS TCP in addition to TCP/IP communication of Ethernet.

As a differentiated thermal component, we have applied heat pump technology to commercialize a steam generating heat pump with a medium capacity (30 kW), supplying saturated steam of 100 °C to 120 °C (see Fig. 7). It is capable of recovering heat from hot discharged water of 60 °C to 80 °C, which was not effectively used in the past. The heat can in turn be applied to facilities requiring steam heating in factories such as those

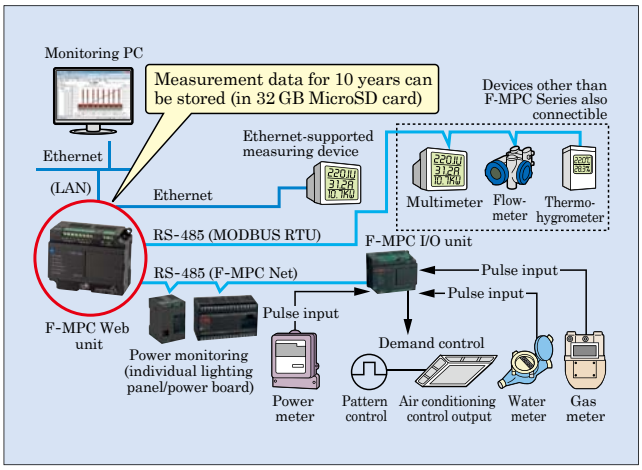

Fig. 6 Example of facility monitoring system using "F-MPC Web unit"

Fig. 7 Steam generating heat pump

for feed water preheating, washing, sterilization, air conditioning and humidification. The equipment can be installed in the vicinity of the respective facilities, which reduces heat dissipation loss due to the extension of piping. In addition, it allows multiple-unit operation with up to 10 units according to the usage of steam. In this way, it can help with energy-saving solutions for factories in areas including heat.

4. Solutions Creating Customer Value

We have combined our characteristic sensing technologies, control technologies backed by abundant experience and power electronics technologies at which we excel to develop a boiler combustion solution package that helps to reduce boiler fuel costs (see Fig. 8). It uses a proprietary laser-based CO analyzer capable of real-time measurement to control combustion with the amount of air that maximizes the boiler efficiency. At the same time, it controls the CO concentration in the boiler exhaust gas so that it is constantly within the standard value range. In this way, it reduces fuel costs. Its effect has been demonstrated with actual boilers and, with a boiler of 100 t/h, an annual cost reduction effect of over 20 million yen can be expected.

In the same way, we have developed a crane solution control package. It utilizes the synergy between instrumentation and control technology, and power electronics technology. As a solution for anti-sway control for quayside cranes, we have achieved the highest level of accuracy in the industry and effectively utilized regenerative energy to achieve an energy saving of 38%.

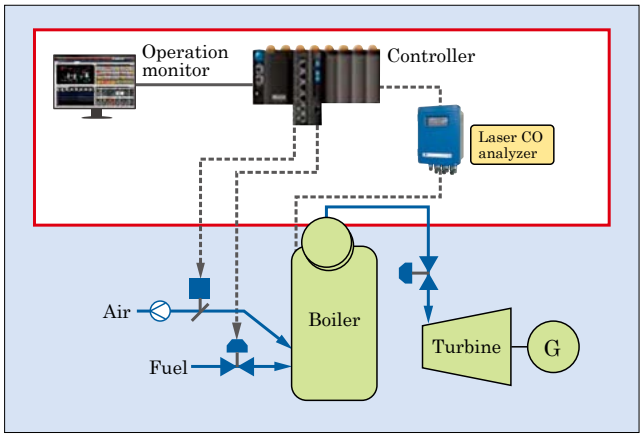

Fig. 8 Boiler combustion solution package

As a solution based on our characteristic sensor, we have, in collaboration with a construction company, developed and commercialized a vibration sensor that applies micro electro mechanical systems (MEMS) and a structure health monitoring system that makes use of it to carry out a primary diagnosis on the structural performance of buildings (see Fig. 9).

The system uses the results of measurement obtained by low-cost MEMS-applied vibration sensors to estimate the maximum acceleration and maximum story drift of the respective stories of the building. It does this based on the vibration data, and then diagnoses the soundness of the building just after the occurrence of an earthquake. This system makes it possible to diagnose whether a building has maintained sufficient strength for withstanding aftershocks, and provides a solution for safety and security.

The full liberalization of the electricity retail market started in April 2016. To deal with it, we have developed a supply-and-demand management system that supports the “planned-value balancing rules” imposed on retail electricity businesses, or power producers and suppliers (PPSs). Through cooperation with NTT DATA Corporation and Kyowa Exeo Corporation, we have released the system as a cloud service for PPSs. Applying the technology for high-speed processing of the massive amounts of data of many customers in addition to the supply and demand simulation technology, characteristic service can be provided as follows:

(a) Demand prediction for low-voltage consumers
(b) Formulation of plans in view of the balancing group (demand/power generation)
(c) Electricity market trading
(d) Automatic capturing of customer information linked with a customer information system

We intend to continue incorporating customers’ demands for improving functions while providing the

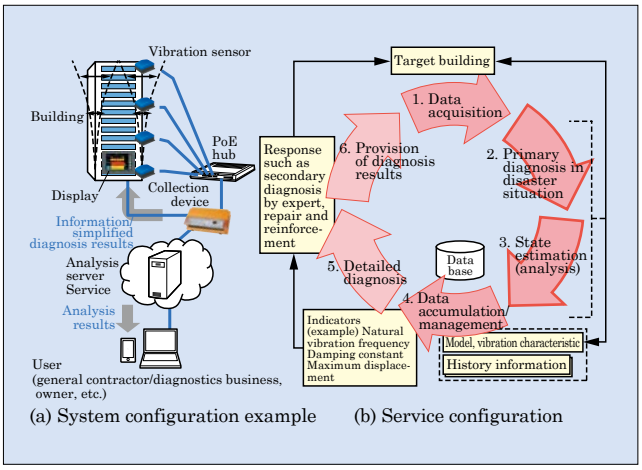

Fig. 9 Example of configuration of solution for diagnosing building soundness

service.

Recently, the concept of the Internet of Things (IoT), in which all things are connected to the Internet, has been gaining increased attention. Fuji Electric owns a complete spectrum of products and technologies ranging from on-site data sensing through gateways, network technology and data analysis technology. We offer various solutions that make use of IoT and create customer value (see Fig. 10).

As one such solution, we have developed a cloud-based comprehensive facility management system that achieves a facility life cycle management environment and started providing the service. To the "EMS service," which has already been provided, we have added new functions of facility "maintenance service" and "operation monitoring service" to achieve an integrated cloud-based service (see Fig. 11). This makes it possible to predictively diagnose equipment degradation and failure and comprehensively manage energy efficiency by grasping the operating conditions of the equipment, keeping the maintenance and inspection records and measuring energy. In this way, total life cycle management from the introduction through operation to renewal of customer facility can be achieved. This maximizes the customer facility management efficiency and minimizes the energy costs.

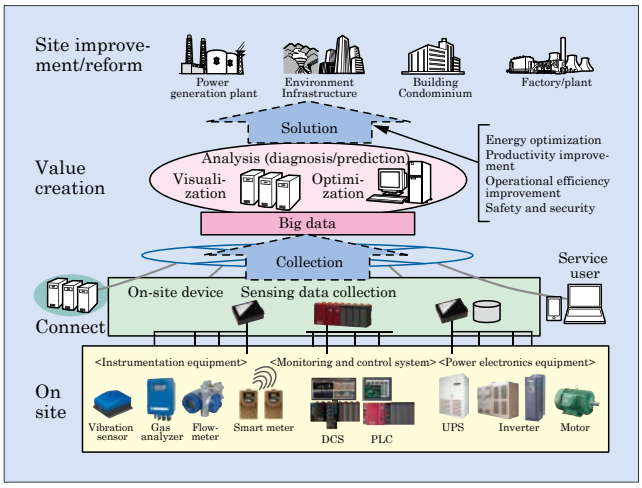

Fig.10 Fuji Electric's IoT solution

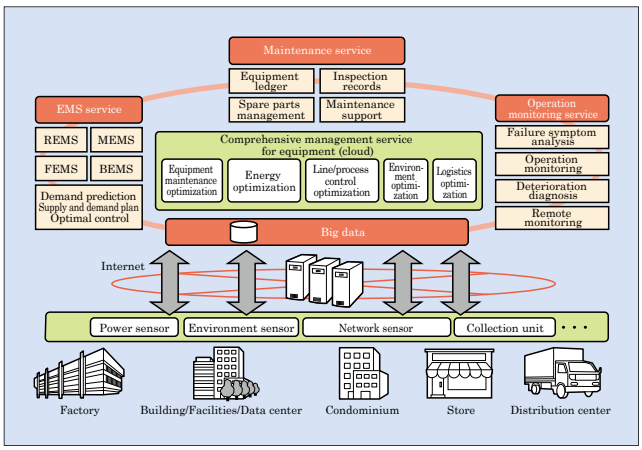

Fig.11 Cloud-based comprehensive facility management service

As a unique application, we have commercialized a wearable remote operation support package. The eyeglass-type wearable device of an operator on the work site is connected with the support site (headquarters) in a remote place in real time via the Internet. Then, proprietary software is used to give support and instructions to the operator. It allows hands-free input of image and voice data for work situations, based on which appropriate instructions can be given by an expert in a remote location.

To realize solutions that make use of IoT and create customer value, we are committed to continuous development of differentiated devices for IoT solutions and the platform technology for them.

5. Fundamental and Advanced Technologies

We have been promoting research and development to develop advanced technologies for the future, as well as fundamental technologies to support each technology that we have presented so far. We develop an array of simulation technologies that deals with thermal fluid dynamics and structures, electromagnetics, and electromagnetic compatibility (EMC: concept of not causing unintentional generation, propagation, and reception of electromagnetic interference).

Power semiconductors used in power electronics equipment may emit electromagnetic noise to the surroundings when there is high-speed switching. Conventionally, measures to deal with it were mainly trial-and-error-type approaches. At Fuji Electric, we are working on the development of technologies to simulate electromagnetic noise (conduction and radiation noise) so as to study measures to combat them from the design phase. For conduction noise, we employ a simplified model in the initial period of development and use a more detailed model at the time of detailed design to conduct accurate simulations for developing products.

For radiation noise, which is more difficult to simulate than conduction noise, we have established a specific technique: We developed a simulation technology for extracting part of a piece of equipment, which is easier to model and requires shorter computation time. Then, while repeating analysis of the part, we analyze the entire equipment[4]. This has made it possible to study a better equipment configuration in a shorter period of time (see Fig. 12).

With regard to our continued research and development of material technologies, we have been developing a resin that can withstand 250 °C for packages of high-temperature operation devices such as SiC devices. We are also working on a dissimilar metal bonding technology that uses metallographic structure simulations, as well as a technology to analyze property changes due to heat and the residual stress of magnetic materials.

We have established an analysis technique related to the adhesion between encapsulation resin and metal,

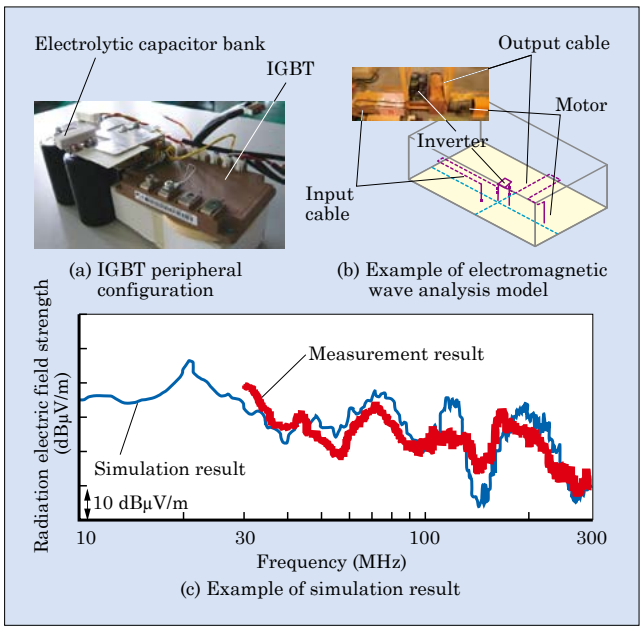

Fig.12 Example of result of radiation noise simulation

which has a significant impact on the reliability of power semiconductor modules. It utilizes simulation technologies such as the first-principles calculation and molecular dynamics calculation. We have built technology for calculating the chemical bonding force between the resin and the material to be bonded based on the molecular structure of the auxiliary agent for close adhesion with resin. With aluminum taken as an example of the component to be bonded, the results of measuring the adhesion for different auxiliary agents can be explained by the size of the chemical bonding force[5] (see Fig. 13). In addition to this chemical bonding force, external factors including the anchor effect and contamination and interface stress due to mechanical characteristics can be taken into account to estimate the actual adhesion.

As companies aim to roll out products globally, compliance with international standards is becoming

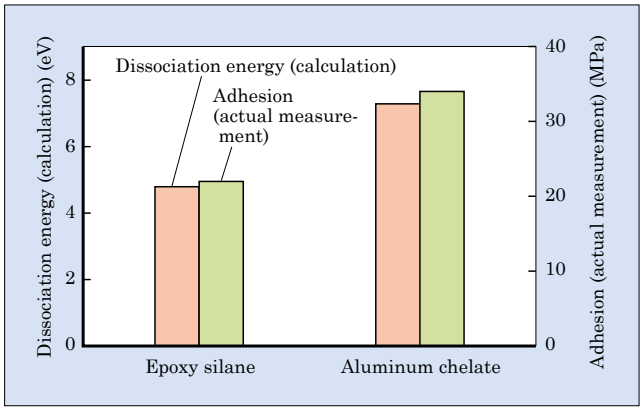

Fig.13 Comparison between chemical bonding force (dissociation energy (calculation)) and adhesion (actual measurement)

increasingly important. In this situation, Fuji Electric continues to strengthen its approach to compliance with international standards. We are actively making efforts to participate in international committee activities, especially those related to power electronics. We have a successful track record of contributing to standardization activities related to the electromagnetic compatibility of power conditioning sub-systems (PCSs) and inverter efficiency measurements.

6. Postscript

We have introduced some of Fuji Electric’s efforts in developing technologies mainly for supplying and using electrical energy safely, securely and efficiently, utilizing thermal energy efficiently, and controlling energy optimally. Building a safe, secure and sustainable society in harmony with the environment will become increasingly important in the future.

To reinforce our technology development, Fuji Electric has constructed and started operation of the Core R&D Center (main building) for company-wide technology development base in the Tokyo Factory area, the Development Center for power semiconductors in the Matsumoto Factory area, and the evaluation testing building for distribution and control devices in the Fukiage Factory area. In addition, the power electronics development center in the Suzuka Factory area, which is intended to consolidate and improve the efficiency of power electronics product development, is scheduled to start operation in autumn 2016.

As we continue to passionately proceed with our research and development, Fuji Electric is committed to its brand statement that represents our pursuit of innovation in energy and environmental technology in order to contribute to the goal of realizing a responsible and sustainable society. We are moving forward in our contributions to become a greater corporate citizen in our global society so that we can achieve our ideals.

References

(1) Onezawa, T. et al. 1,700-V Withstand Voltage SiC Hybrid Module. FUJI ELECTRIC REVIEW, 2015, vol.61, no.4, p.228-231.
(2) Kaneko, S. et al. 3,300-V Withstand Voltage SiC Hybrid Module. FUJI ELECTRIC REVIEW, 2015, vol.61, no.4, p.232-236.
(3) Kobayashi, Y. et al. Simulation Based Prediction of SiC Trench MOSFET Characteristics. FUJI ELECTRIC REVIEW, 2016, vol.62, no.1, p.12-16.
(4) Tamate, M. et al. Electromagnetic Noise Simulation Technology for Power Electronics Equipment. FUJI ELECTRIC REVIEW, 2016, vol.62, no.1, p.37-41.
(5) Ogasawara, M. and Tachioka, M. Study of Adhesion of Resin Materials by Molecular Simulation. FUJI ELECTRIC REVIEW, 2016, vol.62, no.1, p.28-31.

Fuji Electric

Innovating Energy Technology

* All brand names and product names in this journal might be trademarks or registered trademarks of their respective companies.