NDIR GAS ANALYZER FOR STACK GAS

DATA SHEET

ZSU-6

OVERVIEW

This analyzer consists of an infrared gas analyzer, an O_2 sensor and a gas sampling device. It is used for simultaneous and continuous measurement of the NO_X, SO_2, CO, CO_2 and O_2 components in the flue gas of various boilers, garbage incinerators, etc.
For CO and O_2 measurement specifications, the function for coping with the Japanese regulation on dioxin emission is incorporated.

FEATURES

1. Gas concentrations of 5 components is measurable simultaneously and continuously
   NOx, SO_2, CO and CO_2 gas concentration measurements are integrated by infrared method, to which a zirconia or magnetic type O_2 sensor is added for O_2 measurement. Therefore, the gas concentrations of 5 components are simultaneously and continuously measurable.
2. The use of highly sensitive and reliable mass flow detector allows the range ratio of up to 1:25 with the standard 2 range.
3. Maintenance can be performed from the front side, thus saving the installation space.
   Unitized structure of the analyzing block and gas sampling module enables better maintenance.
4. Provided with abundant functions including O_2 correction output, average value output, automatic calibration, CO peak count alarm, automatic range changeover, and alarms.
5. N_2O and CH_4 can also be measured as an optional feature. Having warming effect 300 times as high as that of CO_2, N_2O is the greenhouse gas most controversial now.

SPECIFICATIONS

Standard Specifications

Measuring system:
NOx, SO_2, CO and CO_2 ; Ndir type infrared
O_2 ; Zirconia type, magnetic type

Measurable component and min./max. measurement range:
NO_X ; 0 to 50ppm/0 to 5000ppm
SO_2 ; 0 to 50ppm/0 to 5000ppm
CO ; 0 to 50ppm/0 to 5000ppm
CO_2 ; 0 to 10%/0 to 20%
O_2 ; 0 to 10%/0 to 25%
N_2O and CH_4 can be measured as an optional feature.

Number of measurement ranges:
2 Maximum range ratio: 1:25 (Refer to Code Symbols.)

Warm-up time:
Within 4 hours after power-on

Analog output signals:
Simultaneous output of signals of 4 to 20 mA DC (isolated)
- Five instantaneous value outputs (NO_X, SO_2, CO, CO_2 and O_2)
- Three instantaneous values (NO_X, SO_2, CO) after O_2 correction when provided with O_2 sensor
- Three average values (NO_X, SO_2, CO) after O_2 correction when provided with O_2 sensor
- Allowable load resistance :
  550 Ω or less

Contact output:
(1) Each 1a contact (contact capacity 250 V AC, 2 A or 30 V DC, 3 A) for:
- Range identification of each component (Close/1st range), analyzing block error, calibration error, auto calibration status, maintenance status,and CO peak count alarm

(2) Each 1c contact (contact capacity 250V AC, 1 A or 30 V DC, 1 A) for:
- Concentration alarm for each component's instantaneous value (H, L, HL settable), analyzing block power off

Contact input:
Non-voltage contact (1.5 sec or longer)
• Auto calibration start, average value resetting
Non-voltage contact (Status holded)
• Range changeover (1st range when contact closes), output hold, remote pump OFF (OFF when contact closes)

Indication:
LCD with back light for indicating:
• Instantaneous values (NO_X, SO_2, CO, CO_2 and O_2)
• O_2 corrected instantaneous values (NO_X, SO_2, CO) after O_2 correction when provided with O_2 sensor
• O_2 corrected average values (NO_X, SO_2, CO) after O_2 correction when provided with O_2 sensor
• O_2 average value when provided with O_2 sensor
• Peak count value (when provided with CO, O_2 analyzer)
• Parameter assignment

Fluorescent lamp in cubicle:
Standard equipment

Recorder (option):
Paperless recorder (Fuji Electric's type PHR) mounted

Gas extractor:
Electrical heating type (filter built in)
• Wire mesh filter : 40μm mesh of SUS 316 stainless steel
• Flange : JIS 5K 65AFF
• Mass : Approx. 9 kg (excluding gas sampling pipe)
• Power supply voltage: 100 V AC, 50/60 Hz
• Power consumption: Approx 100 VA
• Sampling pipe: Refer to Code Symbols for materials and length of the pipe.
SUS 316 (length 300, 400, 600, 800, 1000 mm),or titanium (length 600, 800, 1000 mm),or SiC (length 700, 900 mm)
* SUS 316 is used for 800ºC or lower.
* Titanium is used for 1000ºC or lower.
* SiC is used for 1300ºC or lower.

Sample inlet tube:
ø10 / ø8 Teflon tube or heating tube (max. 30 m)
*The heating tube needs to be specified in the following cases.
(1) Ambient temperature -5ºC or lower
(2) SO_2 of 50 or 100 ppm
(3) Tube length 10 m or longer in SO_2 measurement
(Power supply voltage: 100 V AC, 50/60 Hz, power consumption: 36 VA/m)

Rated operating conditions:
• Ambient temperature: -5 to 40ºC (depending on customer's code selection)
• Ambient humidity: 90% RH or less
• Power supply voltage: 100, 110, 115, 200 or 230 V AC ±15% (Fluorescent lamp: ±10%)
(depending on customer's code selection)
• Frequency: 50 or 60 Hz ±0.5 Hz
• Power consumption: Max. 600 VA
(excluding gas extractor and heating tube)

Storage condition:
• Ambient temperature; -20 to 60ºC (Water within the drain pot should be drained before storage.)
• Ambient humidity; 95%RH or lower

Dry air :
(Required for a oil/coal boiler or when the first range of the SO_2 meter for gas dryer purging is 500 ppm or higher.)
Dew point; -20ºC DP or lower
Pressure; 100 kPa to 400 kPa
Dust and mist; None

External dimensions (H x W x D):
Indoor type; 1710 x 800 x 615 mm
Outdoor type; 1780 x 815 x 700 mm

Mass:
Approx. 300 kg (excluding standard gas)

Cubicle finish color:
Munsell 5Y7/1 semi-gloss

Cubicle structure:
Indoor or outdoor installation, of selfstanding type, single-swing front door, plate thickness 2.3 mm standard (both cubicle and door)

Other:
Six standard gas cylinders (3.4 L) accommodatable
Note: Fluctuation in the operation period of 4 hours from the end of warm-up time is within ±2%FS.

Measurement Law type approval No.:
SAN173-1 (NOx analyzer)
SAS172-1 (SO_2 analyzer)
SAC172-1 (CO analyzer)
SE171 (Zirconia O_2 sensor)
SF172 (Magnetic O_2 sensor)

Standard Functions

Function	Description
O_2 Correction	• Conversion of measured NO_X, SO_2 and CO gas concentrations into values at standard O_2 concentration Calculating equation : $C = \frac{C_S (21-O_N)}{21-O_S}$ C : Sample gas concentration after O_2 correction C_S : Measured concentration of sample gas O_S : Measured O_2 concentration O_N : Standard O_2 concentration (4% for petroleum fuel, 5% for gas fuel, 6% for coal fuel, 12% for garbage incinerator) Setting range: 0 to 19% • The result of conversion is indicated and output in a signal of 4 to 20 mA DC.
Auto Calibration	• The gas analyzer is automatically calibrated. • Auto calibration cycle settable range: 1 to 99 hours (1-hour step) or 1 to 40 days (1-day step) • Auto calibration gas injection time settable range: 60 to 599 seconds (in 1-sec step) • Auto/manual calibration error contact output: Provided when calibration quantity exceeds 50% of full scale. • Contact output during auto calibration and maintenance: Provided during calibration gas flow and replacement. Also provided during maintenance. • Auto calibration remote start contact input: Calibration starts at opening after short-circuit for 1.5 sec or longer. • Standard gas consumption: Approx. 1 year with 3.4L cylinder in a calibration cycle of 7 days
Average Value after O_2 Correction, O_2 average value	• NO_X, SO_2 and CO values are averaged after O_2 correction, and the result is indicated and output in 4 to 20 mA DC. • Averaging time is settable by key operation at the front of analyzing block. Settable range: 1 to 59 minutes or 1 to 4 hours (factory-set at 1 hour)
Remote Output Hold	• The output signal values are collectively held according to external contact input. • Output is held during short-circuit.
Average Value Resetting Input	• Output and indication of average value after O_2 conversion are reset according to external contact input. • Output and indication are reset at short-circuit for 1.5 sec or longer.
Automatic range changeover	• Automatically changed from low range to high range, and from high range to low range. Low → High: Changed at 90% point of the low range High → Low: Changed at 80% point of the high range
Remote range Changeover Input	• Low or high range is selectable for each sample component via external contact input. • High range is selected for open-circuit, and low range for short-circuit.
Range Identification Contact Output	• Identification between low and high ranges is output through a contact. • When the contact is closed, low range is selected.
Concentration Alarm Contact Output	• Instantaneous value alarm is settable for each sample component. High, Low, High or Low is settable (by keys at the front of analyzing block). • Contact output hysteresis is also settable. • Contact is 1c type.
CO Instantaneous Value Peak Count Alarm Contact Output	• Alarm is issued and indicated when CO instantaneous value has exceeded the set limit by the set number of times. Settable number of times: 1 to 99, alarm settable range: 10 to 1000 ppm (5 ppm step) • The number of overshootings per hour is indicated.
Analyzing Block Error Contact Output	• Contact output is provided when the analyzing block is abnormal.
Temperature Input Signal	• K thermocouple input x 2 (for recorder available at option)

Performance

Repeatability:
±0.5% of full scale
Zero drift:
±1.0% of full scale or lower/week
(±2.0% of full scale/week when the range is less than 200 ppm)
Max.±2.0% of full scale/month on O_2 sensor
Span drift:
Max. ±2.0% of full scale/week
Max. ±2.0% of full scale/month on O_2 sensor
Linearity:
Max. ±1.0% of full scale
Response time:
For 90% indication (after extracting sample gas through the inlet)
NO_X : 120 sec or shorter
SO_2 : 240 sec or shorter
CO : 120 sec or shorter
CO_2 : 120 sec or shorter
O_2 : 120 sec or shorter
•Sample gas flow rate :
Approx. 2L/min

Standard Requirements for Sample Gas

Temperature:
Standard : 60 to 800ºC
Non standard : 1000ºC (titanuim probe)
1300ºC (SiC probe)
Dust:
100 mg/Nm^3 or less
Pressure:
-3k to +3kPa
Components:
SO_2 : 500 ppm or less
NO_X : 1000 ppm or less
CO_2 : 0 to 15%
CO : 2000 ppm or less
O_2 : 1 to 21%
HCL : 100 ppm or less
The remaining N_2, H_2O

Installation Requirements

(1) Selection of a place which does not receive direct sunlight or radiation from hot substances
If such a place cannot be found, a roof or cover should be prepared for protection.
(2) Avoidance of a place under heavy vibration
(3) Selection of a place where atmospheric air is clean

SCOPE OF DELIVERY

- Gas analyzer system
- Specified external drain separator/drain pot
- Specified gas extractor/probe set
- Specified gas inlet tube set
- Standard accessories

ITEMS TO BE PREPARED SEPARATELY

1. Standard gas and pressure regulator
(Refor to ZSY of CODE SYMBOLS)
2. Recorder (when necessary) type PHR
3. Individual inspection of measurement method
4. 1-year spare (Refor to ZBN of CODE SYMBOLS)
5. Waterproof gland for outdoor wiring port (A25A),
Order No.: 8641625
6. Anchor bolt

CODE SYMBOLS

1 2 3 4 5 6 7 8 9 10 11 12 13 14 15 16 17 18 19 20

Z S U ☐ ☐ ☐ ☐ 6 - ☐ ☐ ☐ ☐ ☐ - ☐ ☐ Y 0 0 ☐ ☐

	Description
	Measuring gas component <4th digit>
P	NO_x
A	SO_2
B	CO
F	NO_x, SO_2
H	NO_x, CO
L	NO_x, SO_2, CO
M	NO_x, SO_2, CO, CO_2
	O_2 sensor — O_2 correction value <5th digit>
0	Without — Without
4	Zirconia — 4% (Oil fuel)
5	Zirconia — 5% (Gas fuel)
6	Zirconia — 6% (Coal fuel)
C	Zirconia — 12% (Refuse incinerator)
D	Magnetic — 4% (Oil fuel)
E	Magnetic — 5% (Gas fuel)
F	Magnetic — 6% (Coal fuel)
G	Magnetic — 12% (Refuse incinerator)
	NO_x measuring range <6th and 7th digit> Select your code in the table at left.
	SO_2 measuring range <9th and 10th digit> Select your code in the table at left.
	CO measuring range <11th and 12th digit> Select your code in the table at left.
	O_2 measuring range <13th codes>
0	Without
1	10/ 25%
2	25%
	CO_2 measuring range <14th and 15th digit>
Y Y	Without
M N	10%/ 20%
M Y	10%/ Without
N Y	20%/ Without
Y	—
0	—
0	—
	(Sample gas pressure) — (External drain separator) <19th digit>
1	–1 to +5kPa — Without
2	–3 to +3kPa — Without
3	–5 to +1kPa — Without
4	–1 to +5kPa — With (Note 2)
5	–3 to +3kPa — With (Note 2)
6	–5 to +1kPa — With (Note 2)
	Cubicle structure <20th digit>
1	Indoor structure
2	Outdoor structure

Measuring Range List

Unit: ppm

Measuring range	Code
Without	YY
50/100	AB
50/200	AC
50/250	AD
50/500	AE
50/1000	AF
50/Without	AY
100/200	BC
100/250	BD
100/500	BE
100/1000	BF
100/2000	BG
100/Without	BY
200/500	CE
200/1000	CF
200/2000	CG
200/5000	CH
200/Without	CY
250/500	DE
250/1000	DF
250/2000	DG
250/5000	DH
250/Without	DY
500/1000	EF
500/2000	EG
500/5000	EH
500/Without	EY
1000/2000	FG
1000/5000	FH
1000/Without	FY
2000/5000	GH
2000/Without	GY
5000/Without	HY

1 2 3 4 5 6 7 8 9 10 11 12 13 14 15 16 17 18 19 20 21 22 23 24 25 26 27 28 29 30 31

Z S U _ _ _ _ 6 - _ _ _ _ _ - _ _ Y 0 0 _ _ - _ _ _ _ _ _ - _ _ _ _ - Z

Description			
Pipe and cable inlets <21th digit>	(Piping port)	(Cabling port)	(Piping port for external installation of gas cylinder)
A	Top left	Top left	Without
C	Top left	Top left	With 3 inlets on lower left side
D	Top left	Top left	With 6 inlets on lower left side
Ambient temperature <22th digit>			
2	Standard (–5 to 40°C)		
3	For cold climate (–10 to 40°C)		
	Instrument nameplate	**Tag plate**	**Display screen Instruction manual <23th digit>**
A	Standard	Without	Japanese
B	Standard	With	Japanese
E	Standard	Without	English
F	Standard	With	English
Recorder <24th digit>			**Recorder (type PHR) available at option**
0	Without		
1	With (6-point recording: recording contents 1)		(Note 1)
2	With (6-point recording: recording contents 2)		(Note 1)
3	With (6-point recording: recording contents 3)		(Note 1)
4	With (6-point recording: recording contents 4)		(Note 1)
5	With (6-point recording: recording contents 5)		(Note 1)
6	With (6-point recording: recording contents 6)		(Note 1)
Z	With (other recording contents)		(Note 1)
Power supply <25th digit>			
A	100V AC 50Hz		
B	100V AC 60Hz		
C	110V AC 50Hz		
D	110V AC 60Hz		
E	115V AC 50Hz		
F	115V AC 60Hz		
G	200V AC 50Hz		
H	200V AC 60Hz		
J	230V AC 50Hz		
K	230V AC 60Hz		
Application <26th digit>			
A	Standard type, refuse, industrial waste incineration, etc.		
B	Gas boiler		
C	Sludge incineration		
D	Oil/coal boiler		
Offical certificate (Japanese regulation) <27th digit>			
Y	Without		
A	NO_x		
B	SO_2		
C	CO		
D	NO_x, SO_2		
E	NO_x, CO		
F	NO_x, SO_2, CO		
G	NO_x, O_2		
H	SO_2, O_2		
J	CO, O_2		
K	NO_x, SO_2, O_2		
L	NO_x, CO, O_2		
M	NO_x, SO_2, CO, O_2		
(Zero gas) <28th digit>			
1	Instrumentation air		
2	Air		
3	Standard gas (Note 3) Order standard gas (type ZSY) separately.		

Recording contents	Code 1	Code 2	Code 3	Code 4	Code 5	Code 6
NO_x instantaneous value			○			○
Average value	○	○	○			○
O_2 correction			○			○
SO_2 instantaneous value			○		○	
Average value	○		○		○	
O_2 correction					○	
CO instantaneous value		○		○		
Average value	○	○		○		
O_2 correction				○		
O_2 instaneous value	○	○	○	○	○	○
Combustion temperature	○	○		○		
Dust collection chamber temperature	○	○		○		

Note 1) The contents to be recorded with a 6-point recorder are assigned and connected as specified in the above table for its delivery.
Recorder type PHR
* If other contents are desired, customer must specify them separately.

Note 2) Specify this code when the downward inclination of the sample inlet tube from the gas extraction point to the analyzer gas inlet is less than 15° or when moisture content of the sample gas is higher than 30%.

Note 3) Specify code 3 when Measure Act and/or CO_2 meter is selected.

1	2	3	4	5	6	7	8		9	10	11	12	13		14	15	16	17	18	19	20		21	22	23	24	25	26		27	28	29	30		31
Z	S	U					6	-						-			Y	0	0			-							-					-	Z

	Gas extractor	Tube material	Tube length	Extraction point temperature <29th digit>
Y	Without	Without	Without	———
1	With	Without	Without	———
A	With	SUS316	300mm	800°C or lower
B	With	SUS316	400mm	800°C or lower
C	With	SUS316	600mm	800°C or lower
E	With	SUS316	800mm	800°C or lower
G	With	SUS316	1000mm	800°C or lower
H	With	SUS316	1200 mm	800°C or lower
J	With	SUS316	1500 mm	800°C or lower
K	With	SUS316	2000 mm	800°C or lower
P	With	Titanium	600mm	1000°C or lower
Q	With	Titanium	800mm	1000°C or lower
R	With	Titanium	1000mm	1000°C or lower
D	With	SiC	700mm	1300°C or lower
F	With	SiC	900mm	1300°C or lower

	Kind of sample inlet tube	Length <30th digit>
Y	Without	Without
A	ø10 / ø8mm Teflon tube	5m
B	ø10 / ø8mm Teflon tube	10m
C	ø10 / ø8mm Teflon tube	15m
D	ø10 / ø8mm Teflon tube	20m
E	ø10 / ø8mm Teflon tube	25m
F	ø10 / ø8mm Teflon tube	30m
G	ø10 / ø8mm Teflon tube	50m
H	Heating tube	10m
J	Heating tube	15m
K	Heating tube	20m
L	Heating tube	25m
M	Heating tube	30m

	Non-standard specifications <31th digit>
Z	Other non-standard specifications

5-Component Gas Sampling System Diagram 1 (Standard type with SO_2 first range of less than 500ppm)

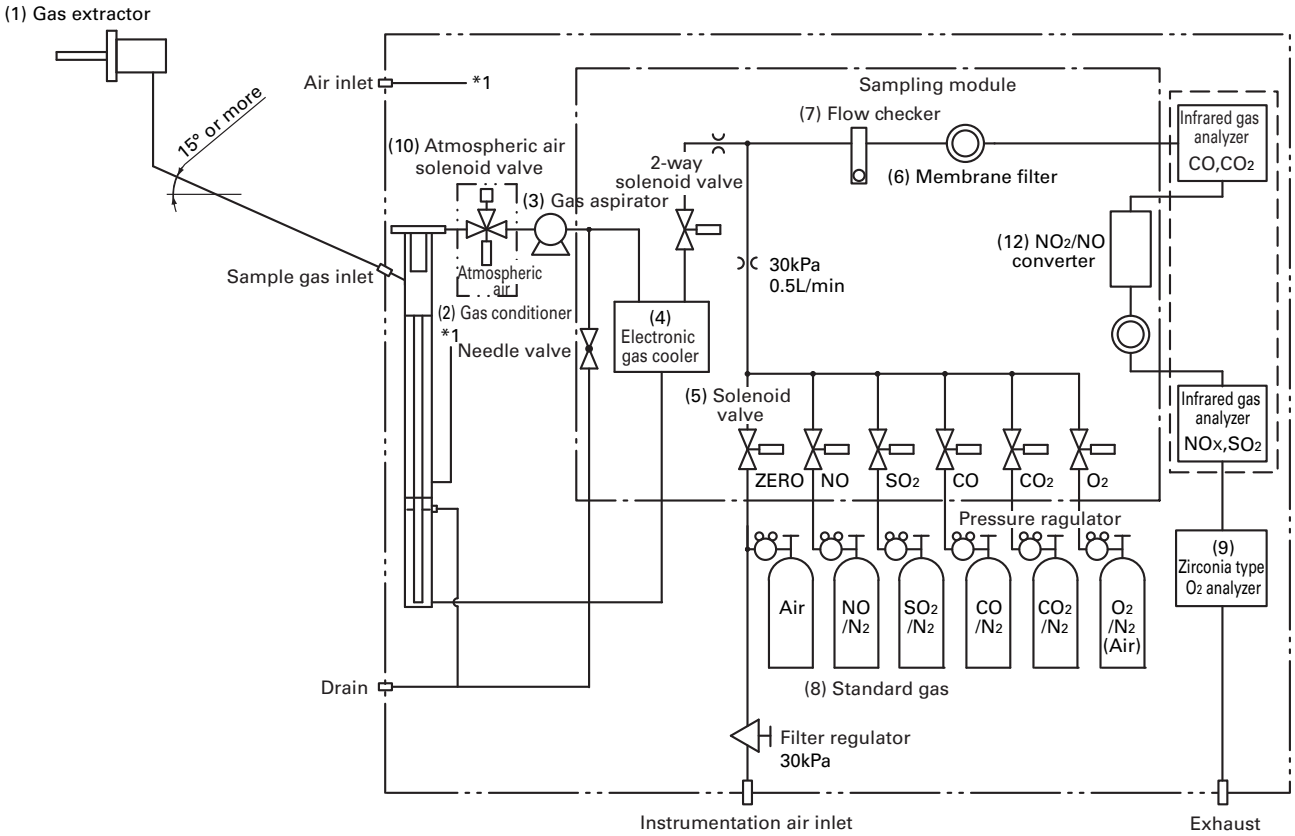

Functions of Individual Components

(1) Gas extractor: Gas extraction, with heating type stainless steel filter having a standard diameter of 40μm

(2) Gas conditioner: Removes drain, mist and dust, and monitors the gas pressure.

(3) Gas aspirator: Aspirates sample gas (Flow rate of sample gas: Approx. 2L/min)

(4) Electronic gas cooler: Dries the moisture in the sample gas.

(5) Solenoid valve: Used for introducing calibration gas.

(6) Membrane filter: PTFE filter, glassfiber filter used to eliminate fine dust particles and permit monitoring of dust adhering condition on the gas analyzer.

(7) Flow checker: Monitors the sample gas flow rate (it can be controlled by the separate needle valve.)

(8) Standard gas: Reference gas used for calibrating zero and span of the analyzer. Up to 6 gases (Zero gas air, span gas NOx, SO_2, CO, CO_2 and O_2) can be used.

(9) O_2 sensor: Used for measuring the oxygen concentration (0 to 25%) in sample gas.

(10) Atmospheric air solenoid valve: Can be built in for using the atmospheric air instead of standard air.

(11) Switching box: 7 power ON-OFF switches of the following equipments are built in.
- Gas extractor
- Gas aspirator
- Fluorescent lamp and service outlet (Max. 2A)
- Sampling module
- O_2 sensor
- Heater for the gas conditioner
- Ventilator

(12) Converter: Added to NOx analyzer. A special catalyst material for efficient conversion of NO_2 gas to NO is used.

(13) Pressure control valve: Pressure adjustor to keep the sample gas pressure at a fixed level.

(14) Gas dryer: Semi-permeable membrane type dehumidifier to dry the moisture in the sample gas to dew point -15°C or less.

(15) Mist catcher: Removes sulfate mist in the sample gas. Replaced every 4 months when SO_3 concentration value is 30ppm. Added when SO_2 value is more than 0 to 500ppm or when oil/coal boiler is used.

5-Component Gas Sampling System Diagram 2

(Gas boiler or sludge incineration with SO_2 first range of less than 500ppm)

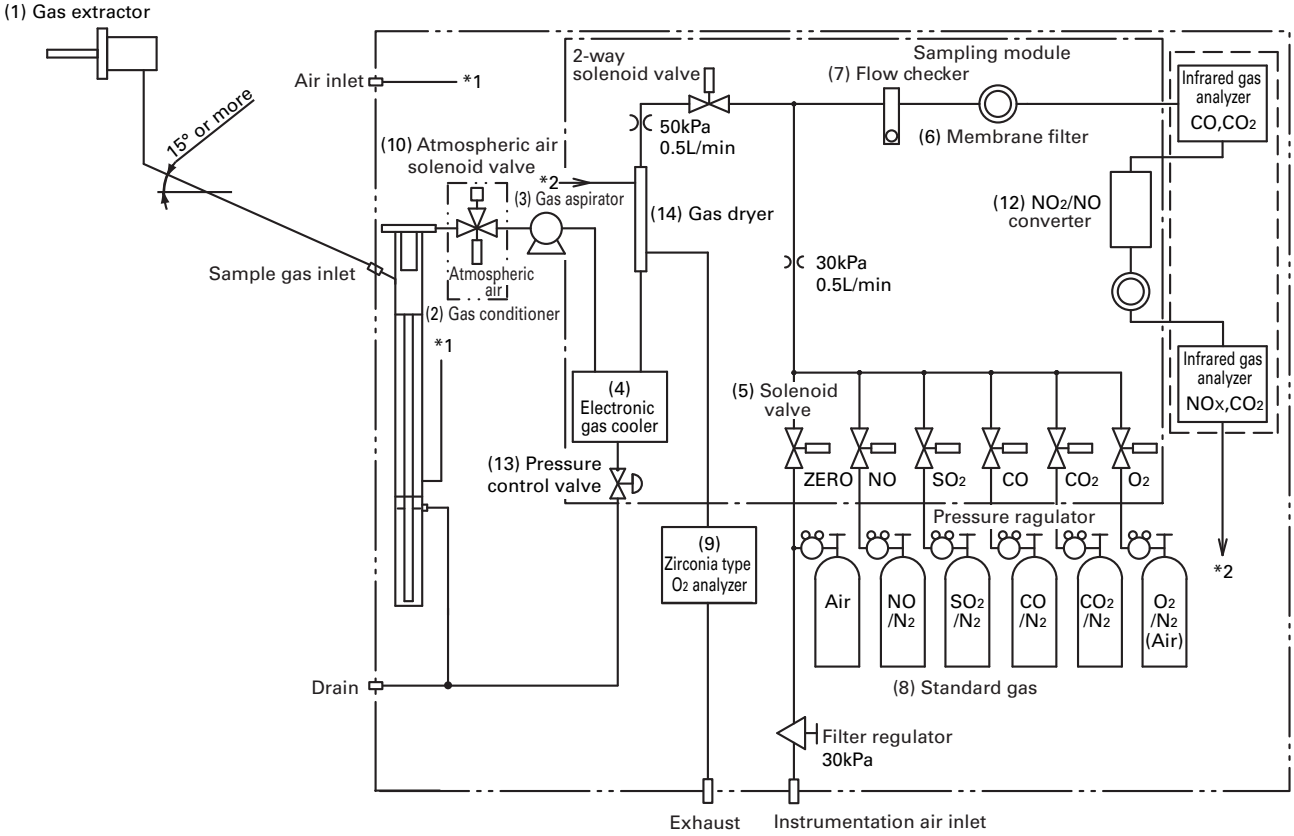

5-Component Gas Sampling System Diagram 3 (SO_2 first range of 500ppm or higher or oil/coal boiler)

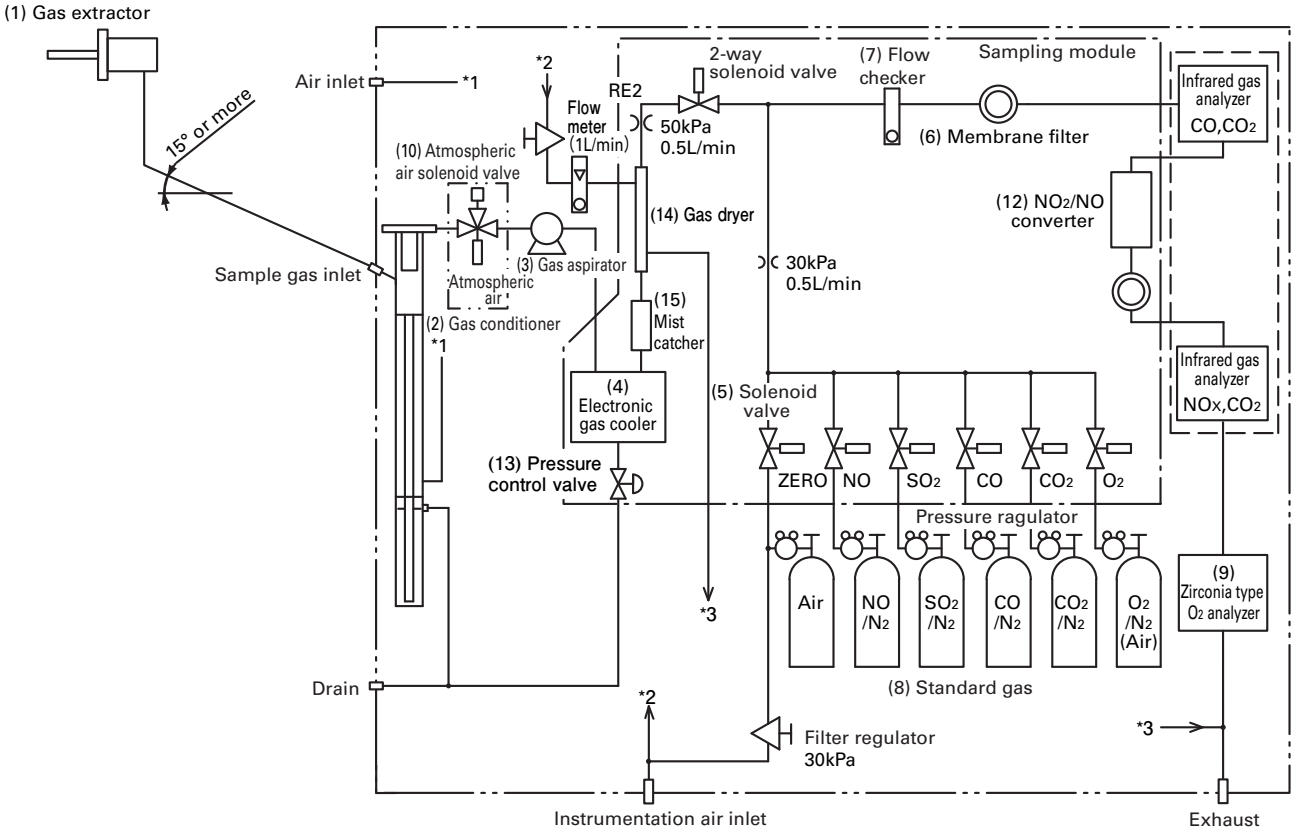

External Terminal Connection Diagram

Ground Terminal (Left side)

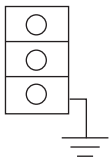

TB1

Power supply		1
		2
Grounding for internal devices		3
		4
Power supply to gas extractor		5
		6
Power supply to heating tube		7
		8
Temperature input 1 (option)	+	9
	-	10
Temperature input 2 (option)	+	11
	-	12

M4 screw

TB2 (option)
When provided with a recorder (option)

Ch6 output (AO)	-	1	13	-	For internal conection
	+	2	14	+	
Ch5 output (AO)	-	3	15	-	Ch11 output (AO)
	+	4	16	+	
Ch4 output (AO)	-	5	17	-	Ch10 output (AO)
	+	6	18	+	
Ch3 output (AO)	-	7	19	-	Ch9 output (AO)
	+	8	20	+	
Ch2 output (AO)	-	9	21	-	Ch8 output (AO)
	+	10	22	+	
Ch1 output (AO)	-	11	23	-	Ch7 output (AO)
	+	12	24	+	

M3.5 screw

TN1

Ch5 output (AO)	-	1	11	-	Ch10 output (AO)
	+	2	12	+	
Ch4 output (AO)	-	3	13	-	Ch9 output (AO)
	+	4	14	+	
Ch3 output (AO)	-	5	15	-	Ch8 output (AO)
	+	6	16	+	
Ch2 output (AO)	-	7	17	-	Ch7 output (AO)
	+	8	18	+	
Ch1 output (AO)	-	9	19	-	Ch6 output (AO)
	+	10	20	+	

M3.5 screw

TN2

O_2 sensor input (already wired)	-	1	11		Ch5 remote range Changeover input (DI)
	+	2	12		
For internal conection	-	3	13		Ch4 remote range Changeover input (DI)
	+	4	14		
Ch11 output (AO)	-	5	15		Ch3 remote range Changeover input (DI)
	+	6	16		
For internal connection		7	17		Ch2 remote range Changeover input (DI)
		8	18		
		9	19		Ch1 remote range Changeover input (DI)
		10	20		

M3.5 screw

TN3

For internal connection	1	11	Ch5 range identification signal (DO)
	2	12	
Pump ON/OFF (DI)	3	13	Ch4 range identification signal (DO)
	4	14	
Remote hold (DI)	5	15	Ch3 range identification signal (DO)
	6	16	
Average value reset (DI)	7	17	Ch2 range identification signal (DO)
	8	18	
Auto calibration remote start (DI)	9	19	Ch1 range identification signal (DO)
	10	20	

M3.5 screw

TN4

CO peak alarm Contact output (DO)	1	11	Maintenance status Contact Output
	2	12	
Auto calibration status Contact output (DO)	3	13	For internal connection
	4	14	
Pump ON/OFF Contact output (already wired) (DO)	5	15	
	6	16	
Calibration error Contact output (DO)	7	17	
	8	18	
Analyzing block error Contact output (DO)	9	19	*For atomospheric air solenoid valve (DO) Already wired
	10	20	

M3.5 screw

TN5

For internal connection		1	11	For internal connection
Alarm 3 (DO)	NO	2	12	NC
	COM	3	13	COM
	NC	4	14	NO
Alarm 2 (DO)	NO	5	15	NO
	COM	6	16	COM
	NC	7	17	NC
Alarm 1 (DO)	NO	8	18	NO
	COM	9	19	COM
	NC	10	20	NC

Analyzing block power interruption (DO)

Alarm 5 (DO)

Alarm 4 (DO)

M3.5 screw

External terminal block diagram (Upper side of main unit)

TB1	TB2		TN1		TN2		TN3		TN4		TN5	
1	1	13	1	11	1	11	1	11	1	11	1	11
2	2	14	2	12	2	12	2	12	2	12	2	12
3	3	15	3	13	3	13	3	13	3	13	3	13
4	4	16	4	14	4	14	4	14	4	14	4	14
5	5	17	5	15	5	15	5	15	5	15	5	15
6	6	18	6	16	6	16	6	16	6	16	6	16
7	7	19	7	17	7	17	7	17	7	17	7	17
8	8	20	8	18	8	18	8	18	8	18	8	18
9	9	21	9	19	9	19	9	19	9	19	9	19
10	10	22	10	20	10	20	10	20	10	20	10	20
11	11	23										
12	12	24										

Note) NO; normal open contact, NC; normal close contact

Contents of Measured Channel (CH)

The following table gives the contents of each output signal according to code symbols.

Code symbol		Contents
4th digit	5th digit	
P	0	Ch1: NOx
A	0	Ch1: SO_2
B	0	Ch1: CO
F	0	Ch1: NOx, Ch2: SO_2
H	0	Ch1: NOx, Ch2: CO
L	0	Ch1: NOx, Ch2: SO_2, Ch3: CO
M	0	Ch1: NOx, Ch2: SO_2, Ch3: CO_2, Ch4: CO
P	4 to G	Ch1: NOx, Ch2: O_2, Ch3: Corrected NOx, Ch4: Corrected NOx average
A	4 to G	Ch1: SO_2, Ch2: O_2, Ch3: Corrected SO_2, Ch4: Corrected SO_2 average
B	4 to G	Ch1: CO, Ch2: O_2, Ch3: Corrected CO, Ch4: Corrected CO average
F	4 to G	Ch1: NOx, Ch2: SO_2, Ch3: O_2, Ch4: Corrected NOx, Ch5: Corrected SO_2, Ch6: Corrected NOx average, Ch7: Corrected SO_2 average
H	4 to G	Ch1: NOx, Ch2: CO, Ch3: O_2, Ch4: Corrected NOx, Ch5: Corrected CO, Ch6: Corrected NOx average, Ch7: Corrected CO average
L	4 to G	Ch1: NOx, Ch2: SO_2, Ch3: CO, Ch4: O_2, Ch5: Corrected NOx, Ch6: Corrected SO_2, Ch7: Corrected CO, Ch8: Corrected NOx average, Ch9: Corrected SO_2 average, Ch10: Corrected CO average
M	4 to G	Ch1: NOx, Ch2: SO_2, Ch3: CO_2, Ch4: CO, Ch5: O_2, Ch6: Corrected NOx, Ch7: Corrected SO_2, Ch8: Corrected CO, Ch9: Corrected NOx average, Ch10: Corrected SO_2 average, Ch11: Corrected CO average

Standard Accessories

No.	Name	Quantity	Remarks
1	Filter paper for membrane filter/as spare (Teflon)	4 pair	When SO_2 meter is provided
	Filter paper for membrane filter (pack of 25)/as spare (glass fiber)	1 box	When SO_2 meter is not provided
2	Fuse (2A)/as spare	1 fuses	
3	Fuse (3.2A)/as spare	1 fuses	
4	Standard gas joint Rc1/4 - ø6mm	1 set	
5	Hose band for fixing standard gas cylinder	1 set	
6	Toaron tube for standard gas connection, 1 m and ø9 / ø5mm	1 tube	
7	Polyethylene tube for standard gas connection, 6 m and ø6 / ø4mm	1 tube	
8	Anchor bolt for cubicle installation, M12 × 160 × 50 (Option)	4	
9	Water bottle for injection	1	
10	Gas sampling pipe flange packing	1	When gas extractor is equipped
11	Gas extractor fastening bolt and nut (M12 × 60mm)	1 set	When gas extractor is equipped
12	Heating tube support	1 set	When heating tube is equipped
13	Instruction manual (INZ-TN5ZSU-E)	1 copy	
14	Cell assembling tool	1	For CO_2 measurement

Spare Parts for 1-Year Measurement

- 1 pairs of or 4 pack of filter paper for membrane filter (Note 1)
- Membrane filter O-ring (G65) × 2
- Membrane filter rubber-ring × 2
- Filter element for conditioner filter × 2
- O-ring (G65) for conditioner filter × 2
- Diaphragm for gas aspirator × 1
- Valve for gas aspirator × 1
- Fuse (2A) × 4
- Fuse (3.2A) × 3
- Capillary for 50kPa/0.5L × 1

.....When SO_2 first range is from 0 to 500 ppm or higher
Not provided for gas boiler, sludge incineration, and oil/coal boiler

- O-ring for gas extractor (G50) × 1
- Packing for gas extractor wire mesh filter × 1
- Wire mesh filter packing for gas extraction × 1
- O-ring (G45) for gas extraction × 1

} Added when gas extractor is equipped

- NOx/NO converter catalyst × 1
- Glass wool for NO_2/NO converter
- Fitting for NO_2/NO converter × 2

} Added when NOx analyzer is equipped

- Mist catcher × 3

.....SO_2 first range of 500 ppm or higher or oil/coal boiler

(Note 1) 1 pairs for SO_2 analyzer, on 1 pack (25sheets) for other

Code Symbols for Spare Parts for 1-Year Measurement

1	2	3	4	5	6	7	8	Description		
Z	B	N	4	S			2			
								(Application)		
					U		-----	Refuse incinerator, Gas boiler		
					1		-----	Oil/coal boiler		
								(Gas extractor)	(NOx analyzer)	(SO_2 analyzer)
						0	-----	Without	Without	Without
						1	-----	With	Without	Without
						2	-----	Without	With	Without
						3	-----	With	With	Without
						A	-----	Without	Without	With (Less than 500 ppm)
						B	-----	With	Without	With (Less than 500 ppm)
						C	-----	Without	With	With (Less than 500 ppm)
						D	-----	With	With	With (Less than 500 ppm)
						E	-----	Without	Without	With (500 ppm or higher)
						F	-----	With	Without	With (500 ppm or higher)
						G	-----	Without	With	With (500 ppm or higher)
						H	-----	With	With	With (500 ppm or higher)

STANDARD GAS CODE SYMBOLS

1	2	3	4	5	6	7	8		9	10	11	Description
Z	S	Y					2	-				
												NO_x measurement first range <4th digit>,ppm
			0									Without
			A									50
			1									100
			2									200
			3									250
			4									500
			5									1000
			6									2000
			7									5000
												SO_2 measurement first range <5th digit>,ppm
				0								Without
				A								50
				1								100
				2								200
				3								250
				4								500
				5								1000
				6								2000
				7								5000
					0							**CO measurement first range <6th digit>,ppm**
					A							Without
					1							50
					2							100
					3							200
					4							250
					5							500
					6							1000
					7							2000
												5000
						Y						**CO_2 measurement first range <7th digit>,ppm**
						A						Without
						B						5
						C						10
												20
									0			**O_2 span gas <9th digit>**
									1			Without
									2			1.8 to 2% O_2 / N_2
									3			10% O_2 / N_2 Note)
												AIR
										Y		**Zero gas <10th digit>**
										A		Without
										B		Air cylinder (without certificate)
										C		Air cylinder (with certificate Japanese offical organization)
										D		N_2 cylinder (without certificate)
												N_2 cylinder (with certificate)
												Offical certificate <11th digit>
											Y	Without
											A	NO_x
											B	SO_2
											C	CO
											D	NO_x, SO_2
											E	NO_x, CO
											F	NO_x, SO_2, CO
											G	NO_x, O_2
											H	SO_2, O_2
											J	CO, O_2
											K	NO_x, SO_2,O_2
											L	NO_x, CO,O_2
											M	NO_x, SO_2, CO, O_2

Note: Select “1” for the 9th digit and “A” or “B” for the 10th digit for zirconia type O_2 sensor.
For the magnetic type O_2 sensor, select “2” or “3” for the 9th digit according to the selection of the first range, and select “C” or “D” for the 10th digit.

Scope of Delivery: standard gas (3.4L) with pressure regulator

OUTLINE DIAGRAM (Unit: mm)

<Gas extractor>

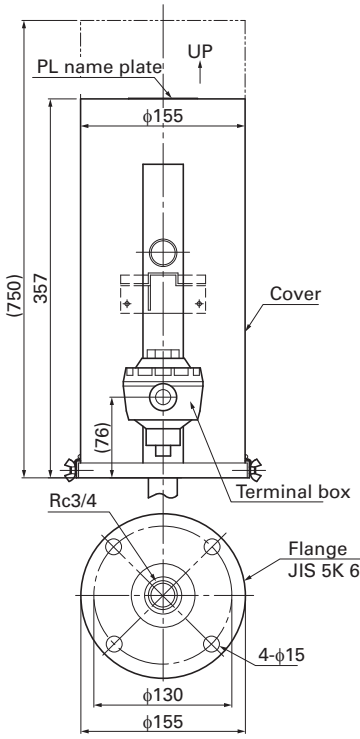

Frange JIS 5K65AFF

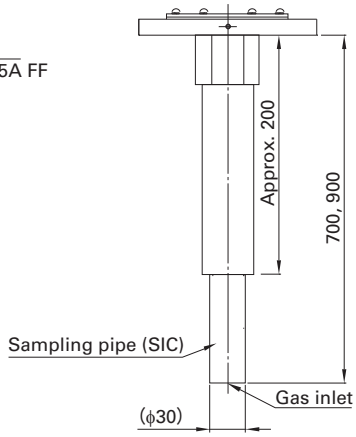

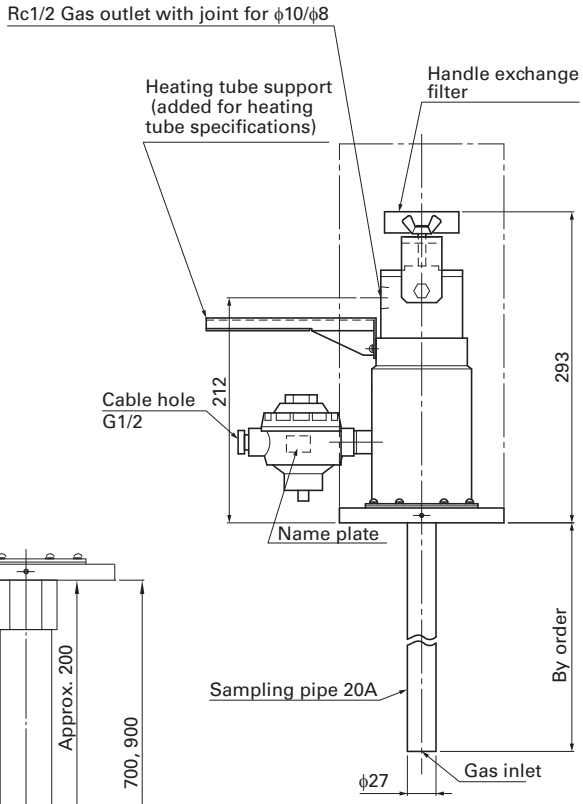

<Drain separator>

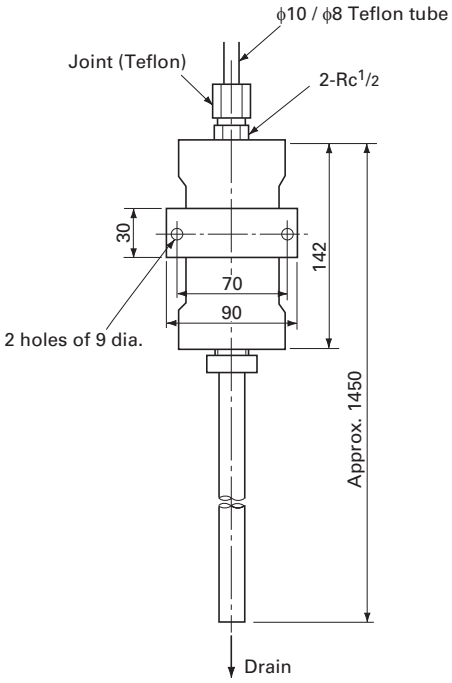

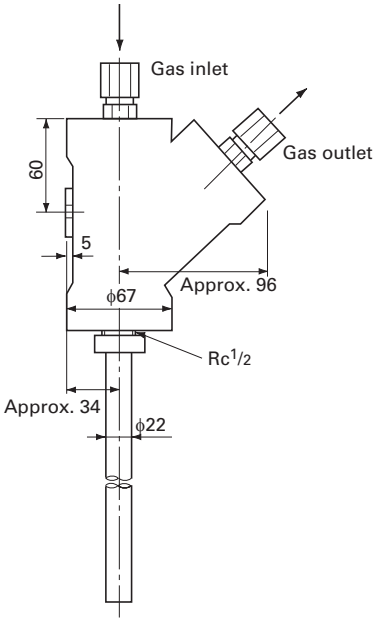

Weight Approx. 0.8 kg

<Drain pot>

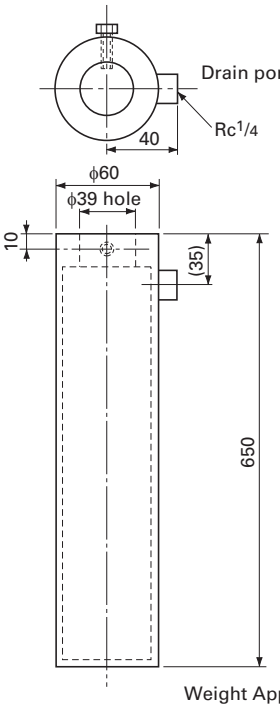

Weight Approx. 0.8 kg

OUTLINE DIAGRAM (Unit: mm)

<Outdoor type>

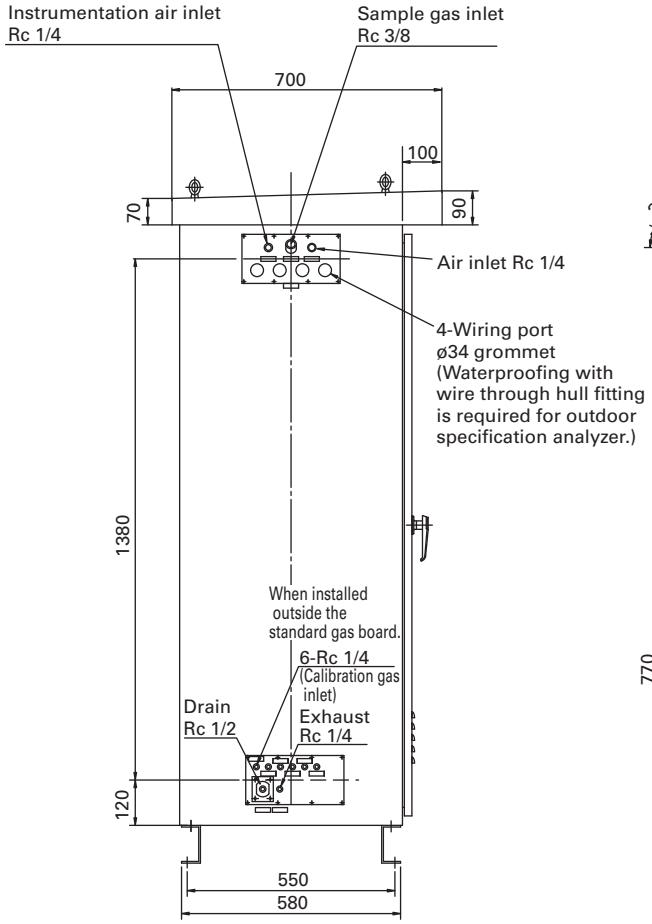

Left side

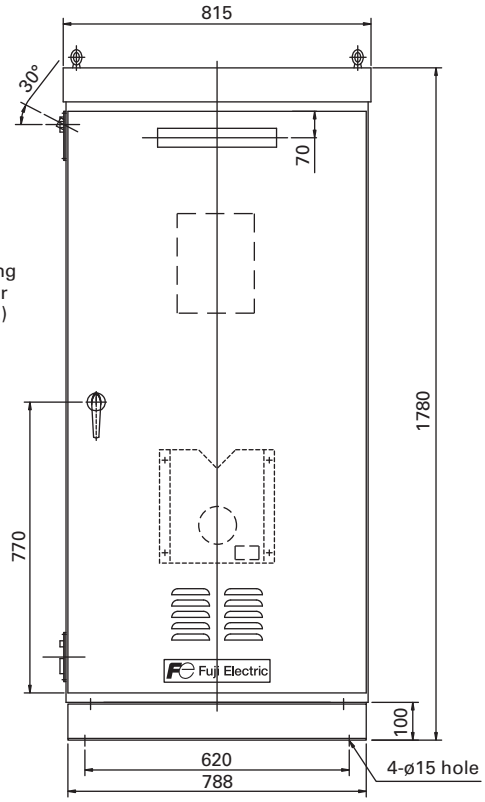

Front

Anchor plan, door open/close diagram

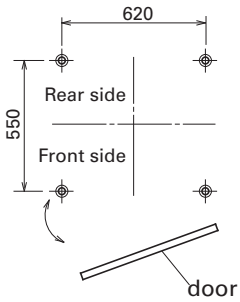

Anchor bolt (option)
(4–M12 × 160 × 50)

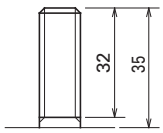

OUTLINE DIAGRAM (Unit: mm)

<Indoor type>

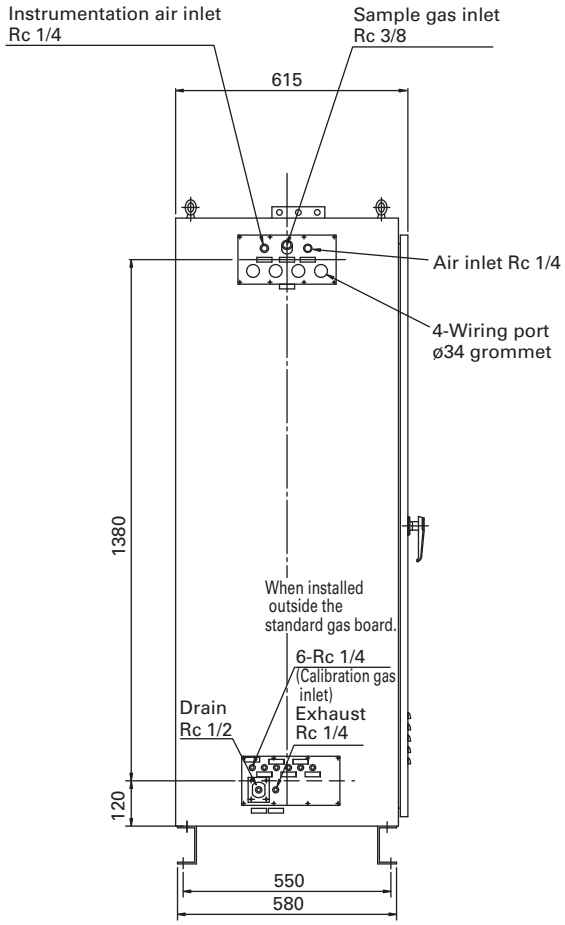

Left side

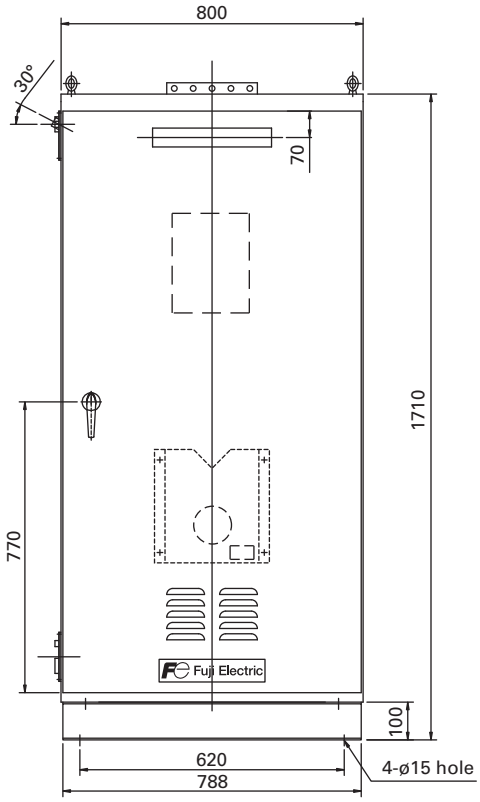

Front

Anchor plan, door open/close diagram

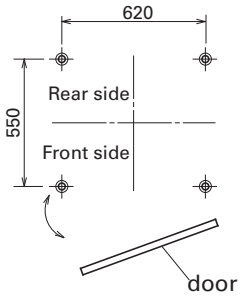

Anchor bolt (option)
(4–M12 × 160 × 50)

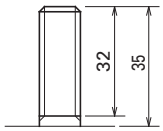

⚠ Caution on Safety

*Before using this product, be sure to read its instruction manual.

Fuji Electric Co., Ltd.

Instrumentation & Sensors Planning Dept.
1, Fuji-machi, Hino-city, Tokyo 191-8502, Japan
http://www.fujielectric.com
Phone: +81-42-514-8930 Fax: +81-42-583-8275
http://www.fujielectric.com/products/instruments/

Information in this catalog is subject to change without notice.

Printed in Japan