Fuji Electric

Innovating Energy Technology

FUJI Power Semiconductors

IGBT/SiC Devices Selection Guide

Small PIM PAGE 8

PIM PAGE 9

6-Pack PAGE 11

Standard 2-Pack PAGE 13

Standard 1-Pack/ Chopper PAGE 15

High Power Module PAGE 17

PrimePACK™ PAGE 19

T/I-type NPC 3-level PAGE 21

Small IPM PAGE 22

IPM PAGE 22

Hybrid SiC Module PAGE 25

Discrete IGBT PAGE 27

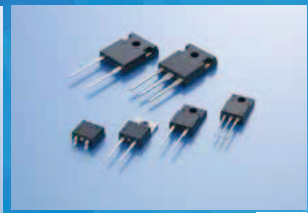

Rectifier Diode / SiC-SBD PAGE 28

Note: PrimePACK™ is registered trademark of Infineon Technologies AG, Germany.

25A2-E-0005a

Features of IGBT Module X Series

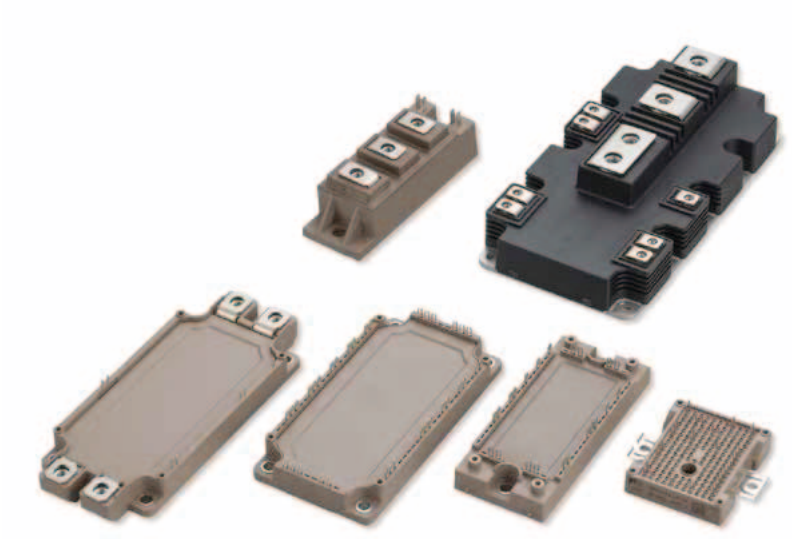

1. Low loss

The module has been optimized by thinning the thickness and miniaturizing the structure of the IGBT chip and diode chip that makes up the module. This reduces power losses during inverter operation compared with previous products (our 6th generation V series).

Reduces inverter loss by 10% and chip temperature by 11 °C (Comparison with the 6th Generation V Series EP3 Package (75 A), at f_c = 8 kHz)

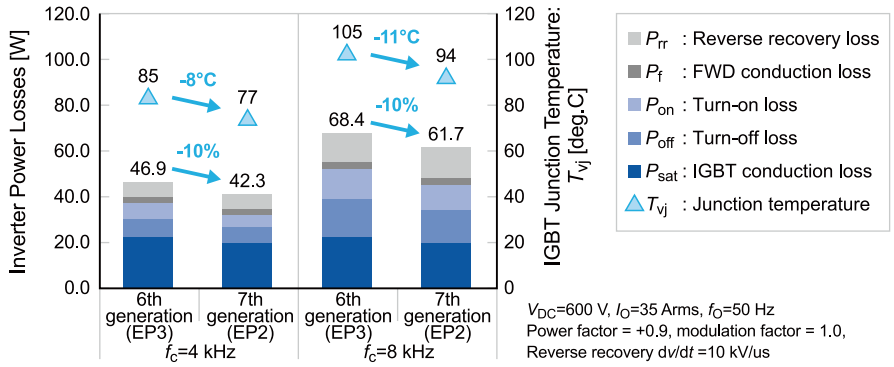

V_{DC}=600 V, I_O=35 Arms, f_O=50 Hz
Power factor = +0.9, modulation factor = 1.0,
Reverse recovery dv/dt =10 kV/us

2. Miniaturization

The application of the newly developed insulating board has improved the heat dissipation of the module. A smaller footprint of about 36% has been achieved by reducing power loss and suppressing heat generation compared with the previous product.

Application example) **36% reduction**

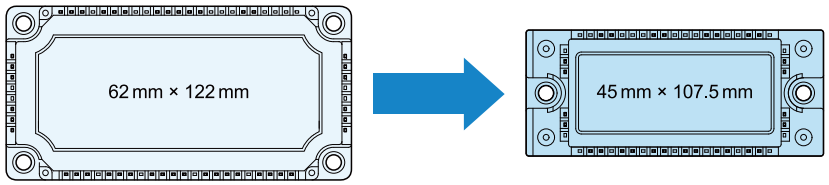

EP3 75 A (6th Generation V Series) EP2 75 A (7th Generation X Series)

3. High-temperature operation

Achieves continuous operation at 175 °C through chip optimization and improved package reliability and heat resistance.

- Up to 35% more output than the previous generation
- ΔT_{vj} power cycle capability improvement (twice as high as before)

Increased output by increasing $T_{vj(op)}$=175℃

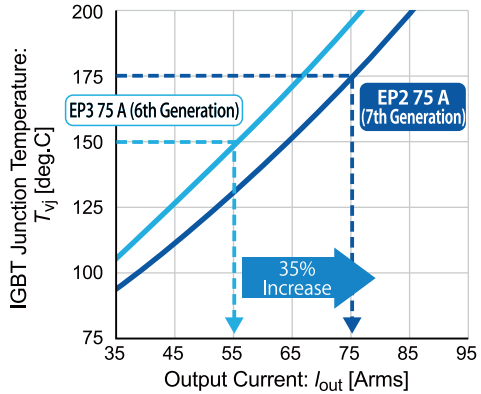

Number of IGBT Switches	Products Category	Page	Internal Configuration						Max V_{CE} (V_{RRM})					Rated Current					
			IGBT Module			Discrete IGBT	Rectifier Diode	Discrete SiC-SBD	600V	650V	1200V	1700V	3300V	≤50A	>50A ≤150A	>150A ≤300A	>300A ≤600A	>600A ≤1200A	>1200A
			Standard Module	Power Integrated Module	Intelligent Power Module														
7	Small-PIM	8		✓					✓	✓	✓			✓					
	PIM EconoPIM™	9		✓					✓	✓	✓			✓	✓				
		10							✓	✓	✓			✓	✓				
6	6-Pack EconoPACK™ EconoPACK™+	11	✓						✓		✓	✓		✓	✓	✓			
		12							✓		✓	✓		✓	✓	✓	✓		
2	Standard 2-Pack	13	✓						✓	✓	✓	✓			✓	✓	✓		
		14									✓	✓				✓	✓	✓	
1	Standard 1-Pack	15	✓								✓	✓				✓	✓	✓	
	Chopper	15	✓						✓		✓			✓	✓	✓			
1,2	High Speed Module	16	✓								✓				✓	✓	✓		
	High Power Module	17,18	✓								✓	✓	✓				✓	✓	✓
	PrimePACK™	19,20	✓								✓	✓					✓	✓	✓
4,12	T/I-type NPC 3-level	21	Reverse-Blocking IGBTs are integrated.						✓		✓	✓		✓	✓	✓	✓	✓	
6,7	IPM	22							✓		✓			✓	✓				
		23			✓				✓		✓			✓	✓	✓			
		24							✓		✓				✓	✓	✓		
1,2,6,7	Hybrid SiC Module	25,26	✓	✓					✓		✓	✓	✓	✓	✓	✓	✓	✓	✓
1	Discrete IGBT	27				✓			✓	✓	✓			✓	✓				
–	Rectifier Diode	28					✓		✓	✓	✓			✓	✓				
–	SiC-SBD	28						✓		✓	✓			✓					

Note: PrimePACK™ is registered trademark of Infineon Technologies AG, Germany.
EconoPIM™ is registered trademark of Infineon Technologies AG, Germany. EconoPACK™ is registered trademark of Infineon Technologies AG, Germany.

IGBT Module Production Number

6 MB I 300 X □···□ - 120 - 50

- 50: Suffix 50 to 99 indicates RoHS compliance
- 120: Max V_{CE} : 060 = 600V, 065 = 650V, 120 = 1200V, 170 = 1700V, 330 = 3300V
- □···□: Package Type
- X: IGBT Device Technology : X Series(7th Generation) / XR Series(7th Generation) V Series(6th Generation) / VW Series(6th Generation) U Series(5th Generation)
- 300: Rated current I_C [A]
- I: Internal Configuration : I = Standard Module, R = Power Integrated Module, P = Intelligent Power Module
- MB: IGBT Module type: MB = Si-IGBT+ Si-Diode, MS = Si-IGBT+ SiC-SBD, S = SiC-SBD
- 6: Number of IGBT switches

Rectifier Diode Production Number

F DR W 50 C 65 L

- L: Series: L = Ultra Fast Recovery, J = Soft/Fast Recovery
- 65: Max V_{RRM} : 60 = 600V, 65 = 650V, 120 = 1200V
- C: Cofiguration : C = Dual (Cathode common), S or T = Single
- 50: Rated Current I_O [A]
- W: Package Type : P = TO-220, W = TO-247-P2
- DR: Device Code : DR = FWD
- F: Company Code : Fuji

Discrete IGBT Production Number

F G W 50 N 65 W D

- D: Diode Type: C or E = With Diode(Full rated), D = With Diode, Blank = Without Diode
- W: Series: W = High Speed W series, H = High Speed V series, V = V Series, RB = RB series
- 65: Max V_{CE} : 60 = 600V, 65 = 650V, 120 = 1200V
- N: Polarity: N = N-ch
- 50: Rated Current I_C [A]
- W: Package Type : W = TO-247-P2, Z = TO-247-4-P2
- G: Device Code : G = IGBT
- F: Company Code : Fuji

F G W 40 XS 65 C

- C: Diode Type: C = With Diode(Full rated), D = With Diode, Blank = Without Diode
- 65: Max V_{CE} : 65 = 650V
- XS: Series:XS-XS series
- 40: Rated Current I_C [A]
- W: Package Type : W = TO-247-P2, Z = TO-247-P2-4
- G: Device Code : G = IGBT
- F: Company Code : Fuji

SiC Schottky-Barrier Diode Production Number

F DC P 10 S 65

- 65: Max V_{RRM} : 65 = 650V, 120 = 1200V
- S: Cofiguration : C = Dual (Cathode common), S or T = Single
- 10: Rated Current I_O [A]
- P: Package Type : A = TO-220F, C = T-Pack(s), P = TO-220, W = TO-247-P2
- DC: Device Code : DC = SiC-SBD
- F: Company Code : Fuji

PIM (Power Integrated Modules) Products Map

7MBR	Ic	IGBT series & Package type						
		V series		X series				
		Solder pins	Press fit pins	Solder pins	Press fit pins	Size	Page	
		VKC	VKA	XKC	XKA	33.8×62.8mm	8	
		VKD	VKB	XKD, XRKD	XKB, XRK□	56.7×62.8mm	8	
		VA, VM, VP	VW, VY	XM□, XP□	XW□, XY□	45×107.5mm	9,10	EconoPIM™
		VB, VN, VR	VX, VZ	XN□, XR□	XX□, XZ□	62×122mm	9,10	

Note:
EconoPIM™ is registered trademark of Infineon Technologies AG, Germany.

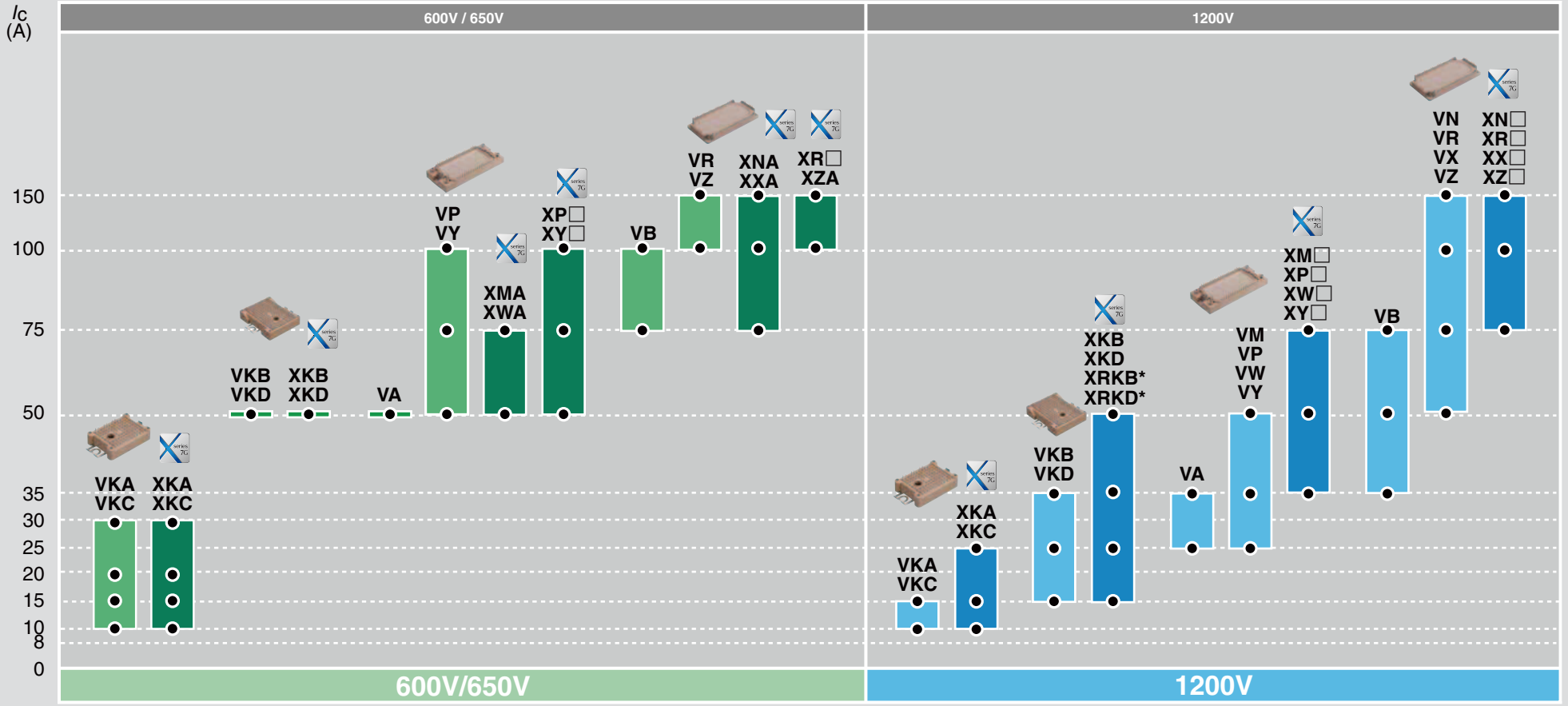

*Under development

6-Pack Products Map

6MBI	Ic	IGBT series & Package type						
		V series		X series				
		Solder pins	Press fit pins	Solder pins	Press fit pins	Size	Page	
		VA	VW	XAE		45×107.5mm	11,12	EconoPACK™
		VB	VX	XB□, XRBE	XX□, XRXE	62×122mm	11,12	
		V				150×162mm	12	EconoPACK™+

Note:
EconoPACK™ and EconoPACK™+ are registered trademark of Infineon Technologies AG, Germany.

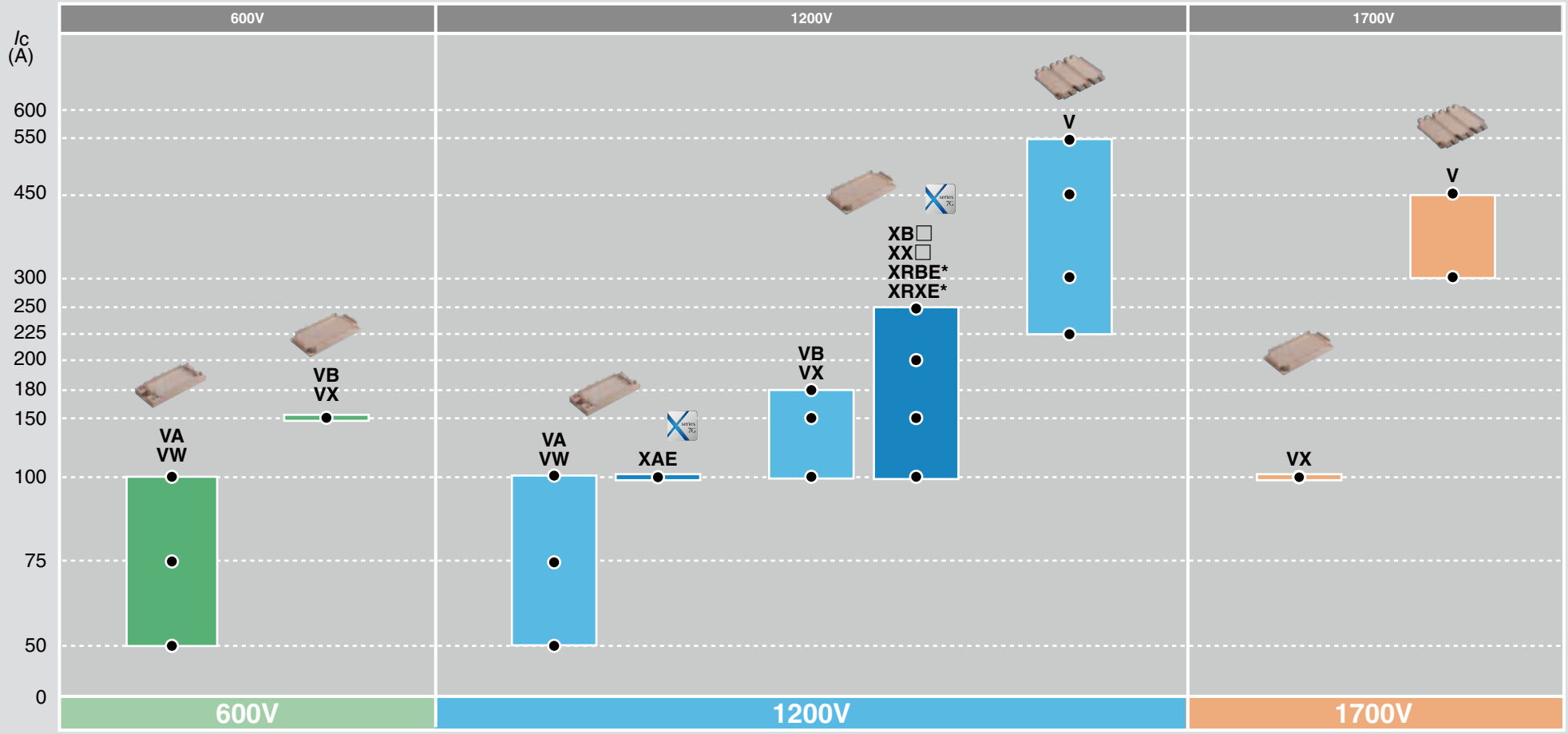

6-Pack (V series)

6-Pack (V series)
6-Pack (X series)

6-Pack (V series)

*Under development

2-Pack Products Map

2MBI	Ic	IGBT series & Package type				
		V series	X series	Size	Page	
		VA	XAA	34×94mm	13	Standard Pack
		VB	XBE	45×92mm	13	
		VD	XDE	62×108mm	13	
		VE	XEE	80×110mm	13	
		VH	XHA	62×108mm	13	
		VJ, VN, VX	XN□, XRN□	62×150mm	14	
		-	XUF, XVF	100×140mm	18	HPnC
		VG, VT	-	140×130mm	17	High Power Module
		VXA	XXA, XXE	89×172mm	19	PrimePACK™
		VXB	XXB, XXF, XXG, XRXF	89×250mm	19	

PrimePACK™ is registered trademark of Infineon Technologies AG, Germany

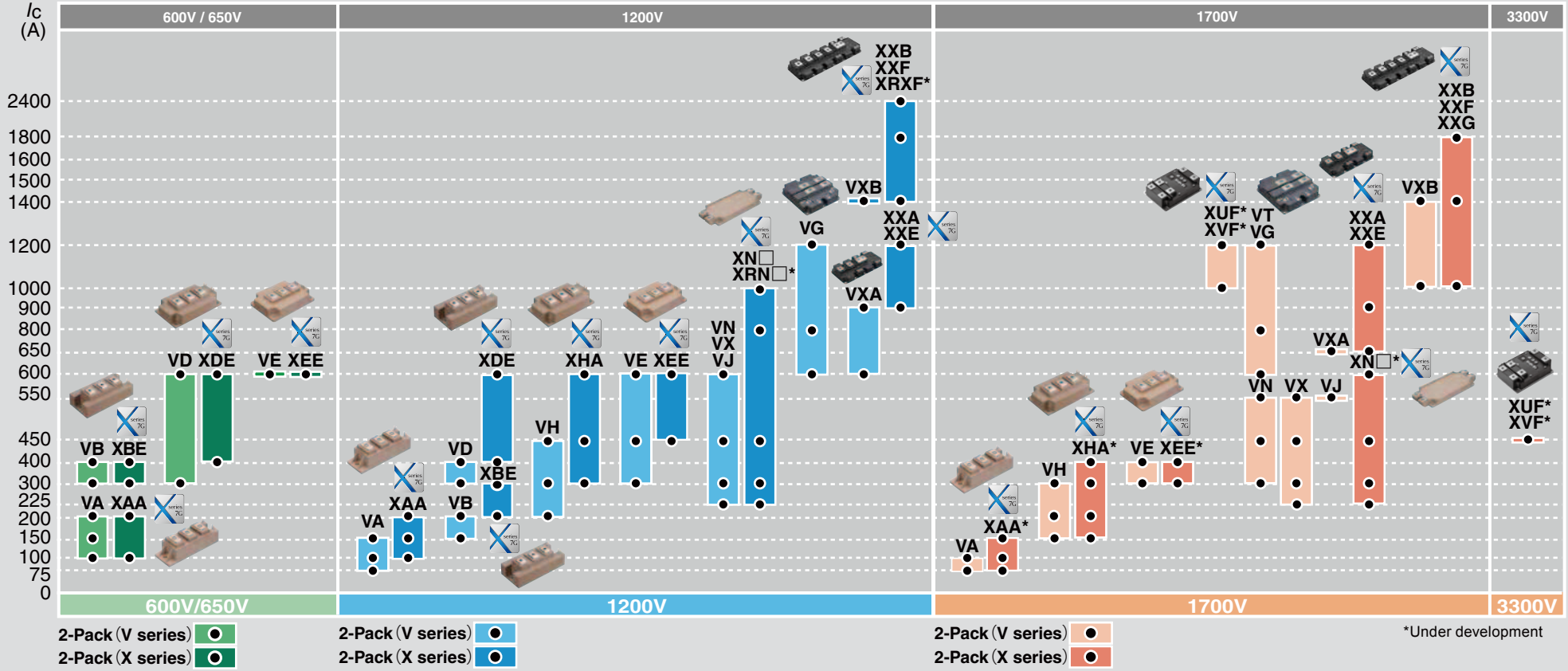

1-Pack Products Map

1MBI	Ic	IGBT series & Package type			
		V/U series	Size	Page	
		V	62×108mm	15	Standard Pack
		VC, VR, UG	140×130mm	17	High Power Module
		VD, VS, UE	140×190mm	17	High Power Module

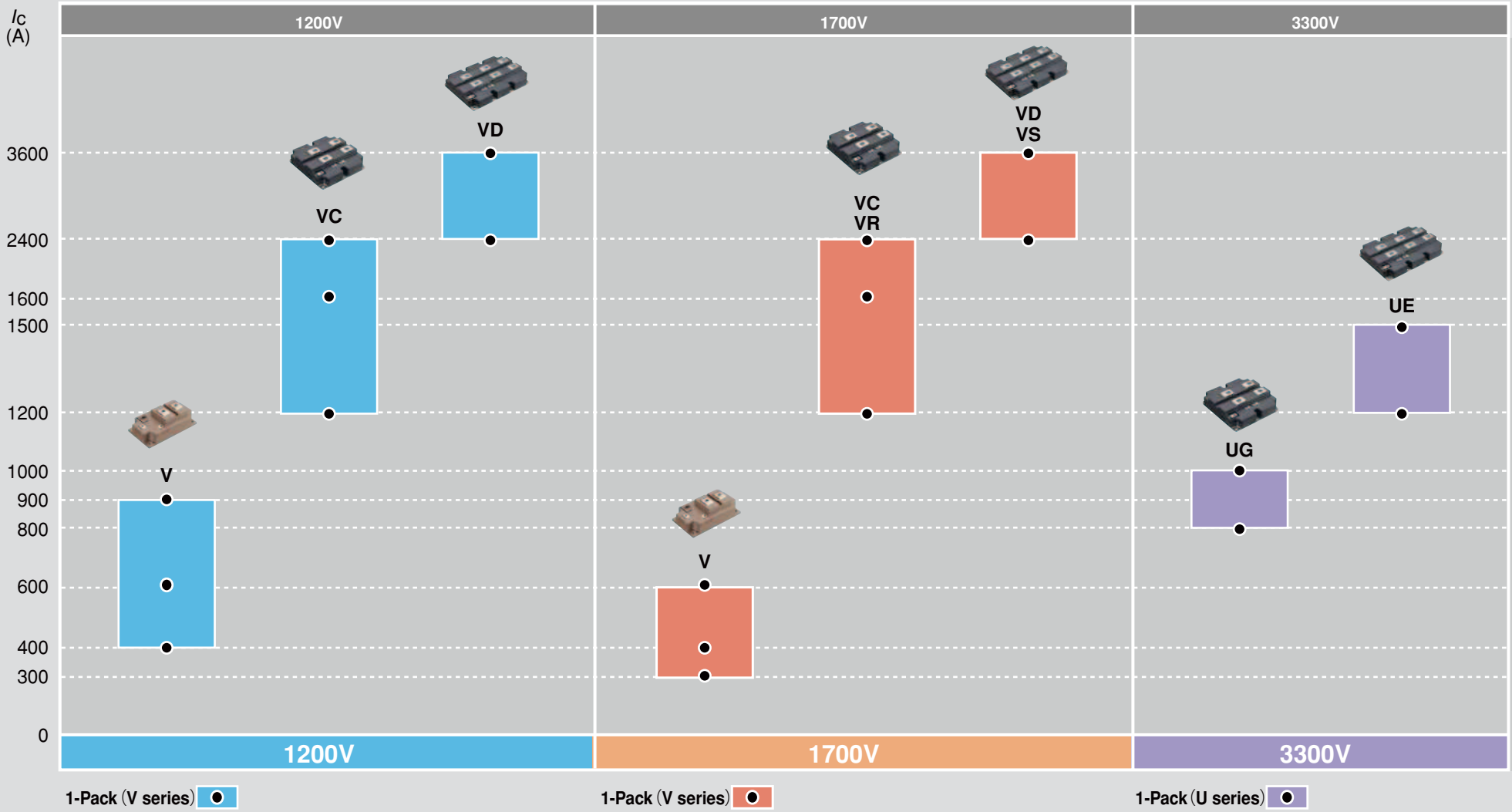

1-Pack (V series) ●　1-Pack (V series) ●　1-Pack (U series) ●

IPM (Intelligent Power Modules) Products Map

6/7MBP *Ic*

IGBT series & Package type	Size	V series		X series	Page
		7 in 1	6 in 1	6 in 1	
XSD, XSF	26×43mm	–	–	✓	22
VAA	49.5×70mm	–	✓	–	22
VBA	50.2×87mm	–	✓	–	22
VFN	55×90mm	✓	✓	–	22
VDA, VDN	84×128.5mm	✓	✓	–	23
VEA	110×142mm	✓	✓	–	24

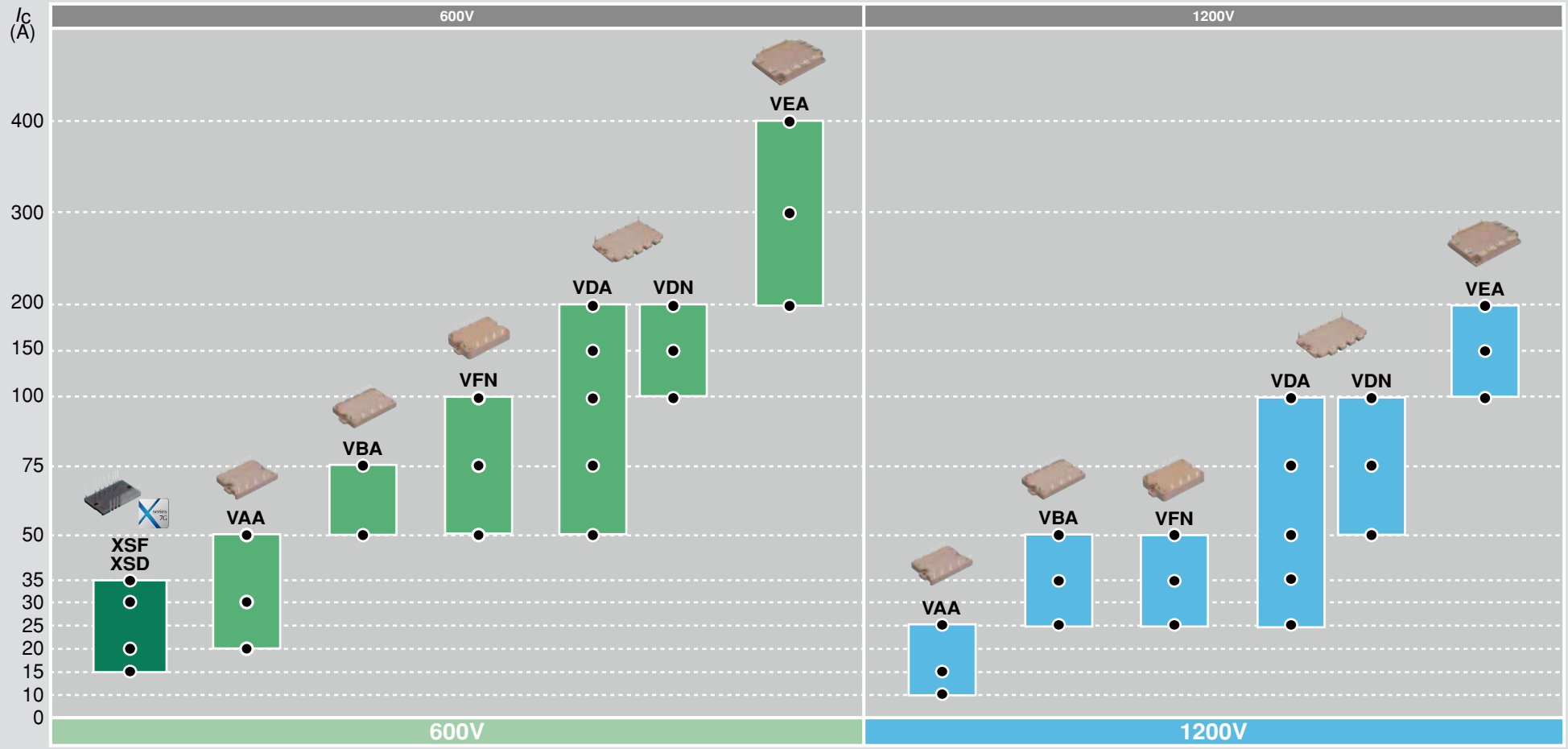

IPM (V series)
IPM (X series)

IPM (V series)

Small PIM (Power Integrated Modules)

mm

		Ic	650V X series	600V V series	1200V X series	1200V V series
With NTC, press fit pins	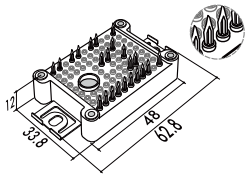 V: M726, X: M730 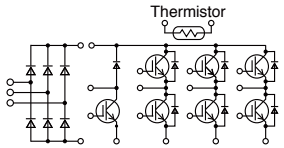	10A	7MBR10XKA065-50	7MBR10VKA060-50	7MBR10XKA120-50	7MBR10VKA120-50
		15A	7MBR15XKA065-50	7MBR15VKA060-50	7MBR15XKA120-50	7MBR15VKA120-50
		20A	7MBR20XKA065-50	7MBR20VKA060-50		
		25A			7MBR25XKA120-50	
		30A	7MBR30XKA065-50	7MBR30VKA060-50		
With NTC, press fit pins	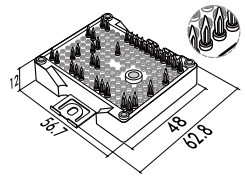 V: M727, X: M731 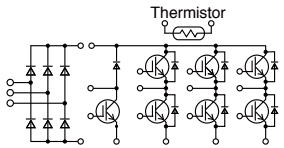 XKB, VKB 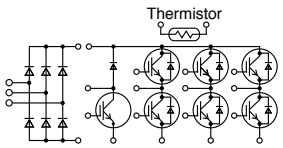 XRKB	15A			7MBR15XKB120-50	7MBR15VKB120-50
		25A			7MBR25XKB120-50	7MBR25VKB120-50
		35A			7MBR35XKB120-50	7MBR35VKB120-50
		50A	7MBR50XKB065-50	7MBR50VKB060-50	7MBR50XRKB120-50*	
With NTC, solder pins	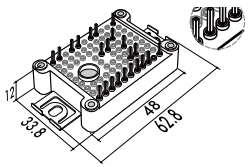 V: M728, X: M732 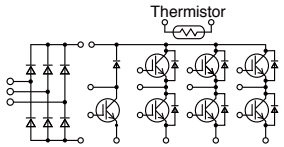	10A	7MBR10XKC065-50	7MBR10VKC060-50	7MBR10XKC120-50	7MBR10VKC120-50
		15A	7MBR15XKC065-50	7MBR15VKC060-50	7MBR15XKC120-50	7MBR15VKC120-50
		20A	7MBR20XKC065-50	7MBR20VKC060-50		
		25A			7MBR25XKC120-50	
		30A	7MBR30XKC065-50	7MBR30VKC060-50		
With NTC, solder pins	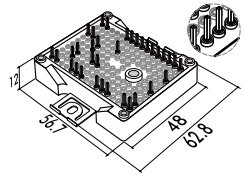 V: M729, X: M733 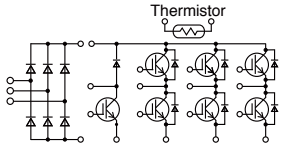 XKD, VKD 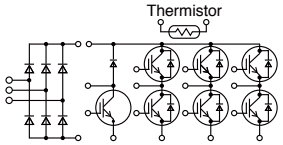 XRKD	15A			7MBR15XKD120-50	7MBR15VKD120-50
		25A			7MBR25XKD120-50	7MBR25VKD120-50
		35A			7MBR35XKD120-50	7MBR35VKD120-50
		50A	7MBR50XKD065-50	7MBR50VKD060-50	7MBR50XRKD120-50*	

*Under development

PIM (Power Integrated Modules) EconoPIM™

mm

With NTC, solder pins, PIM

	Ic	650V X series	600V V series	1200V X series	1200V V series
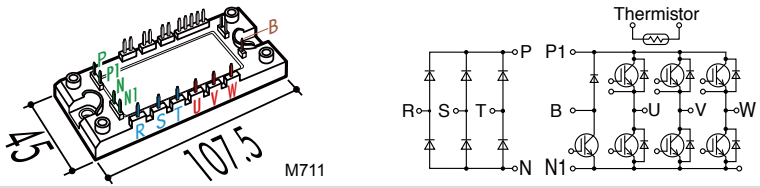 M711	25A				7MBR25VA120-50
	35A				7MBR35VA120-50
	50A		7MBR50VA060-50		
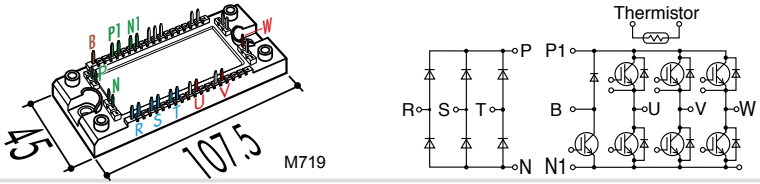 M719	25A				7MBR25VM120-50
	35A			7MBR35XMA120-50	7MBR35VM120-50
	50A	7MBR50XMA065-50		7MBR50XMA120-50	7MBR50VM120-50
	75A	7MBR75XMA065-50		7MBR75XME120-50	
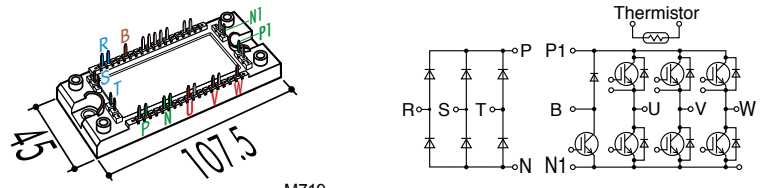 M719	25A				7MBR25VP120-50
	35A			7MBR35XPA120-50	7MBR35VP120-50
	50A	7MBR50XPA065-50	7MBR50VP060-50	7MBR50XPA120-50	7MBR50VP120-50
				7MBR50XPE120-50	
	75A	7MBR75XPA065-50	7MBR75VP060-50	7MBR75XPE120-50	
	100A	7MBR100XPE065-50	7MBR100VP060-50		
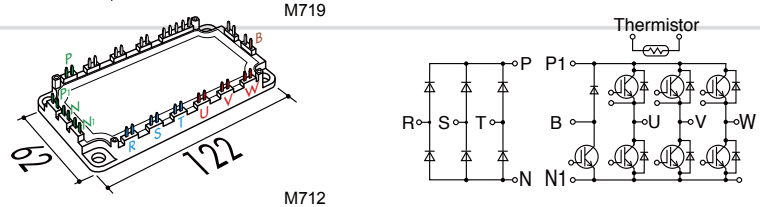 M712	35A				7MBR35VB120-50
	50A				7MBR50VB120-50
	75A		7MBR75VB060-50		7MBR75VB120-50
	100A		7MBR100VB060-50		
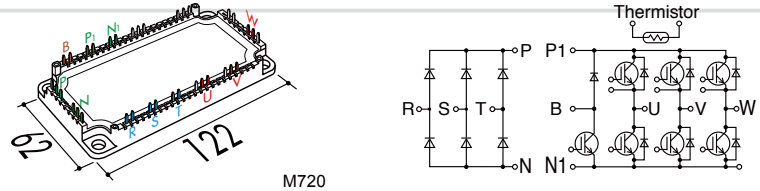 M720	50A				7MBR50VN120-50
	75A	7MBR75XNA065-50		7MBR75XNA120-50	7MBR75VN120-50
	100A	7MBR100XNA065-50		7MBR100XNA120-50	7MBR100VN120-50
	150A	7MBR150XNA065-50		7MBR150XNE120-50	7MBR150VN120-50
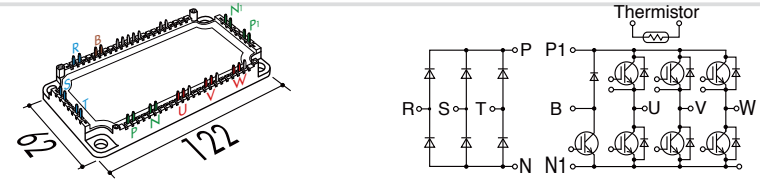 M720	50A				7MBR50VR120-50
	75A			7MBR75XRA120-50	7MBR75VR120-50
				7MBR75XRE120-50	
	100A	7MBR100XRA065-50	7MBR100VR060-50	7MBR100XRA120-50	7MBR100VR120-50
				7MBR100XRE120-50	
	150A	7MBR150XRA065-50	7MBR150VR060-50	7MBR150XRE120-50	7MBR150VR120-50
		7MBR150XRE065-50			

Note1: Pin assignment of output terminals changes within the range of colored position depending on output current.
Note2: EconoPIM™ is registered trademark of Infineon Technologies AG, Germany.

PIM (Power Integrated Modules) EconoPIM™

mm

With NTC, press fit pins. PIM

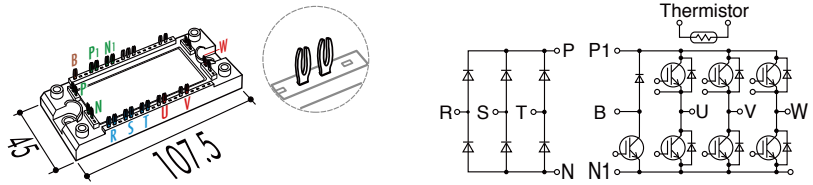

M721

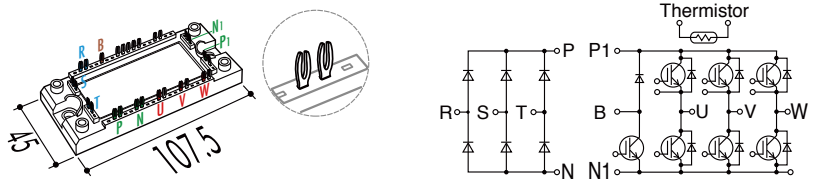

M721

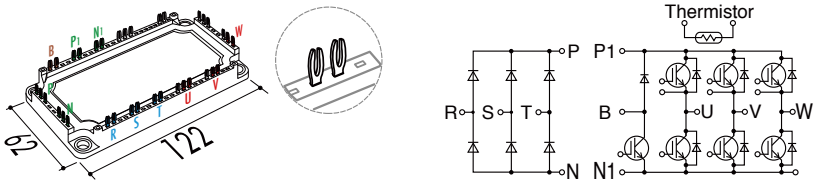

M722

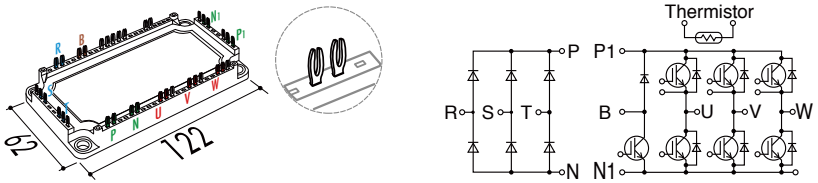

M722

	650V	600V	1200V	
Ic	X series	V series	X series	V series
25A				7MBR25VW120-50
35A			7MBR35XWA120-50	7MBR35VW120-50
50A	7MBR50XWA065-50		7MBR50XWA120-50	7MBR50VW120-50
75A	7MBR75XWA065-50		7MBR75XWE120-50	
25A				7MBR25VY120-50
35A			7MBR35XYA120-50	7MBR35VY120-50
50A	7MBR50XYA065-50	7MBR50VY060-50	7MBR50XYA120-50	7MBR50VY120-50
75A	7MBR75XYA065-50	7MBR75VY060-50	7MBR75XYE120-50	
100A	7MBR100XYE065-50	7MBR100VY060-50		
50A				7MBR50VX120-50
				7MBR50VX120-80
75A	7MBR75XXA065-50		7MBR75XXA120-50	7MBR75VX120-50
				7MBR75VX120-80
100A	7MBR100XXA065-50		7MBR100XXA120-50	7MBR100VX120-50
				7MBR100VX120-80
150A	7MBR150XXA065-50		7MBR150XXE120-50	7MBR150VX120-50
				7MBR150VX120-80
50A				7MBR50VZ120-50
				7MBR50VZ120-80
75A			7MBR75XZA120-50	7MBR75VZ120-50
				7MBR75VZ120-80
100A	7MBR100XZA065-50	7MBR100VZ060-50	7MBR100XZA120-50	7MBR100VZ120-50
		7MBR100VZ060-80		7MBR100VZ120-80
150A	7MBR150XZA065-50	7MBR150VZ060-50	7MBR150XZE120-50	7MBR150VZ120-50
		7MBR150VZ060-80		7MBR150VZ120-80

Note1: Pin assignment of output terminals changes within the range of colored position depending on output current.
Note2: EconoPIM™ is registered trademark of Infineon Technologies AG, Germany.
Note3: “-80” : Pre-Applied Thermal-Interface-Material for “-50”

6-Pack EconoPACK™

mm

With NTC, solder pins

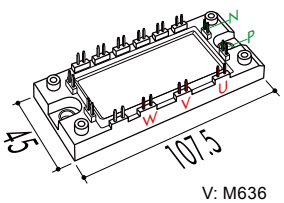

V: M636

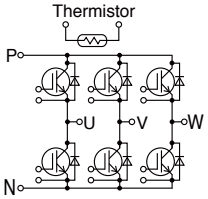

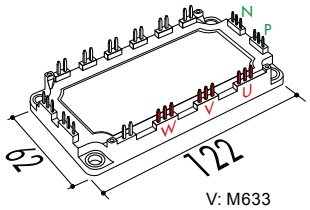

V: M633

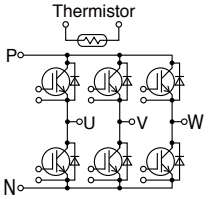

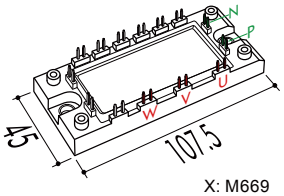

X: M669

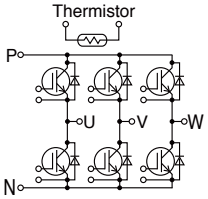

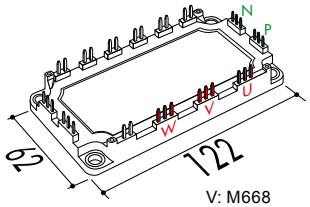

V: M668

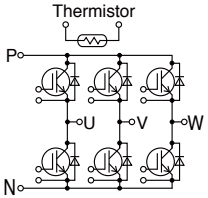

XBA, XBE

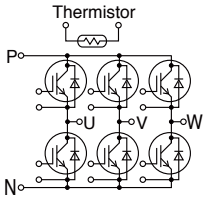

XRBE

		600V	1200V	
	Ic	V series	X series	V series
	50A	6MBI50VA-060-50		6MBI50VA-120-50
	75A	6MBI75VA-060-50		6MBI75VA-120-50
	100A	6MBI100VA-060-50		6MBI100VA-120-50
	100A			6MBI100VB-120-50
	150A	6MBI150VB-060-50		6MBI150VB-120-50
	180A			6MBI180VB-120-50
				6MBI180VB-120-55
	100A		6MBI100XAE120-50	
	100A		6MBI100XBA120-50	
	150A		6MBI150XBA120-50	
	200A		6MBI200XBA120-50	
			6MBI200XBE120-50	
	250A		6MBI250XRBE120-50*	

Note1: 6MBI180VB-120-55; Premium type (Low Thermal Impedance Version)
Note2: Pin assignment of output terminals changes within the range of colored position depending on output current.
Note3: EconoPACK™ is registered trademark of Infineon Technologies AG, Germany.

*Under development

6-Pack EconoPACK™

mm

With NTC, press fit pins

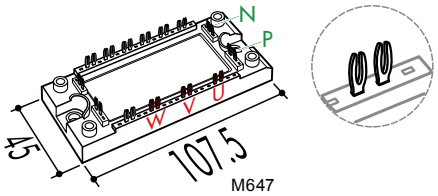

M647

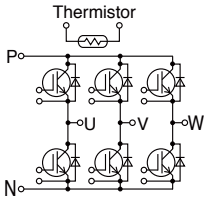

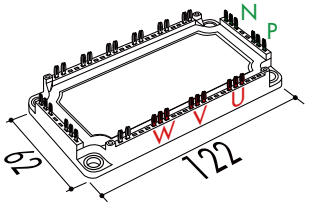

M648

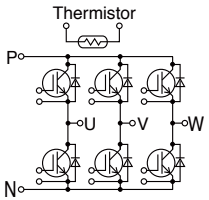

XXA, XXE, VX

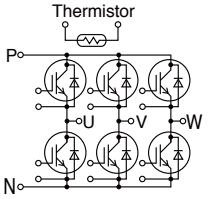

XRXE

	600V	1200V		1700V
Ic	V series	X series	V series	V series
50A	6MBI50VW-060-50		6MBI50VW-120-50	
75A	6MBI75VW-060-50		6MBI75VW-120-50	
100A	6MBI100VW-060-50		6MBI100VW-120-50	
100A		6MBI100XXA120-50	6MBI100VX-120-50	6MBI100VX-170-50
			6MBI100VX-120-80	6MBI100VX-170-80
150A	6MBI150VX-060-50	6MBI150XXA120-50	6MBI150VX-120-50	
	6MBI150VX-060-80		6MBI150VX-120-80	
180A			6MBI180VX-120-50	
			6MBI180VX-120-80	
			6MBI180VX-120-55	
			6MBI180VX-120-85	
200A		6MBI200XXA120-50		
		6MBI200XXE120-50		
250A		6MBI250XRXE120-50*		

*Under development

Note1: 6MBI180VB-120-55, 6MBI180VX-120-55; Premium type (Low Thermal Impedance Version)
Note2: Pin assignment of output terminals changes within the range of colored position depending on output current.
"-80","-85" : Pre-Applied Thermal-Interface-Material for "-50","-55"
Note3: EconoPACK™ is registered trademark of Infineon Technologies AG, Germany.

6-Pack EconoPACK™+

mm

With NTC, High power 6-Pack

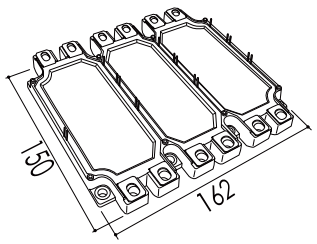

M629

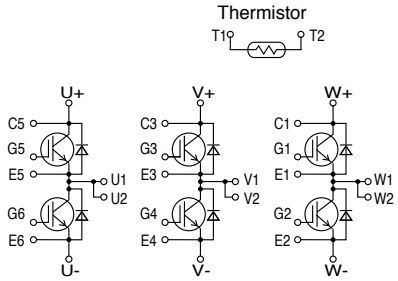

	1200V	1700V
Ic	V series	V series
225A	6MBI225V-120-50	
300A	6MBI300V-120-50	6MBI300V-170-50
	6MBI300V-120-80	
450A	6MBI450V-120-50	6MBI450V-170-50
		6MBI450V-170-80
550A	6MBI550V-120-50	

Note1: EconoPACK™+ is registered trademark of Infineon Technologies AG, Germany.
Note2: "-80" : Pre-Applied Thermal-Interface-Material for "-50"

Standard 2-Pack

2-Pack

mm

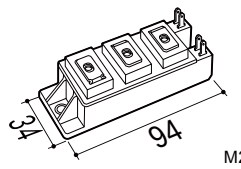

M263

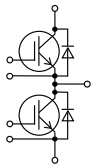

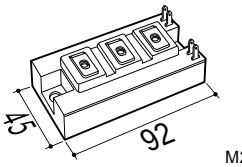

M274

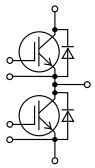

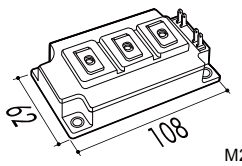

M275

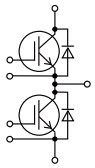

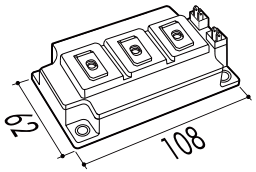

M276

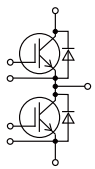

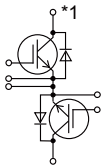

2MBI450VH-120F

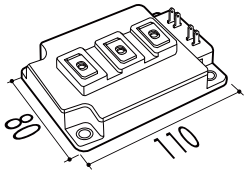

M277

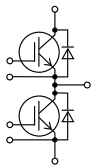

Ic	650V X series	600V V series	1200V X series	1200V V series	1700V X series	1700V V series
75A				2MBI75VA-120-50	2MBI75XAA170-50*	2MBI75VA-170-50
100A		2MBI100VA-060-50	2MBI100XAA120-50	2MBI100VA-120-50	2MBI100XAA170-50*	2MBI100VA-170-50
150A	2MBI150XAA065-50	2MBI150VA-060-50	2MBI150XAA120-50	2MBI150VA-120-50	2MBI150XAA170-50*	
200A	2MBI200XAA065-50	2MBI200VA-060-50	2MBI200XAA120-50			
150A				2MBI150VB-120-50		
200A			2MBI200XBE120-50	2MBI200VB-120-50		
300A	2MBI300XBE065-50	2MBI300VB-060-50	2MBI300XBE120-50			
400A	2MBI400XBE065-50	2MBI400VB-060-50				
300A				2MBI300VD-120-50		
400A	2MBI400XDE065-50	2MBI400VD-060-50	2MBI400XDE120-50	2MBI400VD-120-50		
600A	2MBI600XDE065-50	2MBI600VD-060-50	2MBI600XDE120-50			
150A					2MBI150XHA170-50*	2MBI150VH-170-50
						2MBI150VH-170-80
200A				2MBI200VH-120-50	2MBI200XHA170-50*	2MBI200VH-170-50
				2MBI200VH-120-80		2MBI200VH-170-80
300A			2MBI300XHA120-50	2MBI300VH-120-50	2MBI300XHA170-50*	2MBI300VH-170-50
				2MBI300VH-120-80		2MBI300VH-170-80
400A					2MBI400XHA170-50*	
450A			2MBI450XHA120-50	2MBI450VH-120-50		
				2MBI450VH-120-80		
				2MBI450VH-120F-50*1		
				2MBI450VH-120F-80*1		
600A			2MBI600XHA120-50			
300A				2MBI300VE-120-50	2MBI300XEE170-50*	2MBI300VE-170-50
				2MBI300VE-120-80		2MBI300VE-170-80
400A					2MBI400XEE170-50*	2MBI400VE-170-50
						2MBI400VE-170-80
450A			2MBI450XEE120-50	2MBI450VE-120-50		
				2MBI450VE-120-80		
600A	2MBI600XEE065-50	2MBI600VE-060-50	2MBI600XEE120-50	2MBI600VE-120-50		
		2MBI600VE-060-80		2MBI600VE-120-80		

Note: “-80” : Pre-Applied Thermal-Interface-Material for “-50”

*Under development

Standard 2-Pack

mm

		Ic	1200V X series	1200V V series	1200V V series With SIN-substrate *1	1700V X series	1700V V series	1700V V series With SIN-substrate *1
With NTC, solder pins	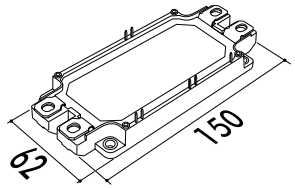 M254 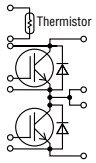	225A	2MBI225XNA120-50	2MBI225VN-120-50	2MBI225VN-120S-50	2MBI225XNA170-50*		
				2MBI225VN-120-80				
		300A	2MBI300XNA120-50	2MBI300VN-120-50	2MBI300VN-120S-50	2MBI300XNA170-50*	2MBI300VN-170-50	
				2MBI300VN-120-80	2MBI300VN-120S-80		2MBI300VN-170-80	
		450A	2MBI450XNA120-50	2MBI450VN-120-50	2MBI450VN-120S-50	2MBI450XNA170-50*	2MBI450VN-170-50	
				2MBI450VN-120-80	2MBI450VN-120S-80		2MBI450VN-170-80	
		550A						2MBI550VN-170-50
								2MBI550VN-170-80
		600A	2MBI600XNG120-50		2MBI600VN-120-50	2MBI600XNG170-50*		
					2MBI600VN-120-80			
	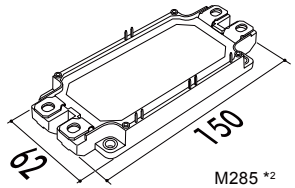 M285 *2 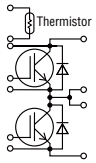 XNE 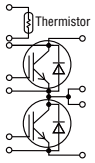 XRNE	600A	2MBI600XNE120-50			2MBI600XNE170-50*		
		800A	2MBI800XNE120-50					
		1000A	2MBI1000XRNE120-50*					
With NTC, press fit pins	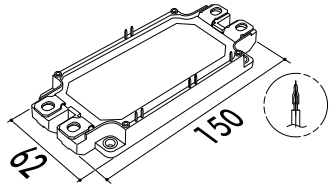 M282 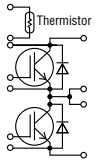	225A	2MBI225XNB120-50	2MBI225VX-120-50		2MBI225XNB170-50*	2MBI225VX-170-50	
				2MBI225VX-120-80			2MBI225VX-170-80	
		300A	2MBI300XNB120-50	2MBI300VX-120-50		2MBI300XNB170-50*	2MBI300VX-170-50	
				2MBI300VX-120-80			2MBI300VX-170-80	
		450A	2MBI450XNB120-50	2MBI450VX-120-50		2MBI450XNB170-50*	2MBI450VX-170-50	
				2MBI450VX-120-80			2MBI450VX-170-80	
		550A						2MBI550VX-170-50
								2MBI550VX-170-80
		600A	2MBI600XNH120-50		2MBI600VX-120-50	2MBI600XNH170-50*		
					2MBI600VX-120-80			
	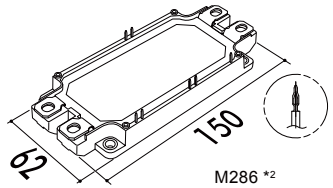 M286 *2 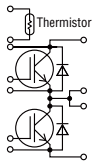 XNF 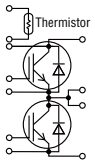 XRNF	600A	2MBI600XNF120-50			2MBI600XNF170-50*		
		800A	2MBI800XNF120-50					
		1000A	2MBI1000XRNF120-50*					
With NTC, spring contacts	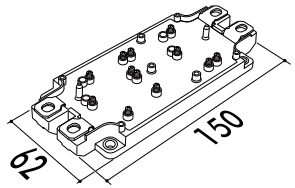 M260 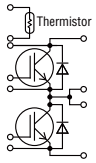	225A		2MBI225VJ-120-50				
				2MBI225VJ-120-80				
		300A		2MBI300VJ-120-50				
				2MBI300VJ-120-80				
		450A		2MBI450VJ-120-50				
				2MBI450VJ-120-80				
		550A						2MBI550VJ-170-50
								2MBI550VJ-170-80
		600A			2MBI600VJ-120-50			
					2MBI600VJ-120-80			

Note1: "-80" : Pre-Applied Thermal-Interface-Material for "-50" Note2: *1 Low Thermal Impedance Version Note3: *2 Low thermal impedance and high tracking capability type

*Under development

Standard 1-Pack

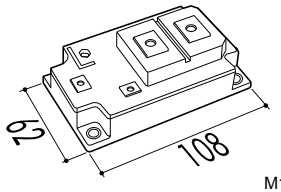

M153

mm

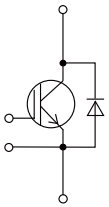

	1200V		1700V
	V series		V series
Ic	Aluminium oxide DCB	Aluminium nitride DCB	Aluminium oxide DCB
300A			1MBI300V-170-50
400A	1MBI400V-120-50	1MBI400VF-120-50	1MBI400V-170-50
600A	1MBI600V-120-50	1MBI600VF-120-50	1MBI600V-170-50
900A	1MBI900V-120-50		

Chopper

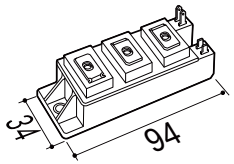

M262

mm

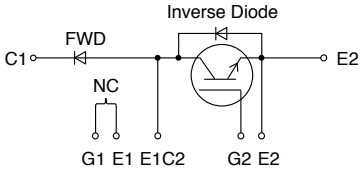

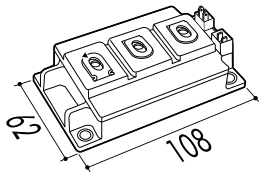

M259

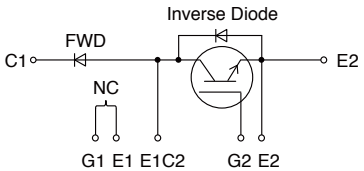

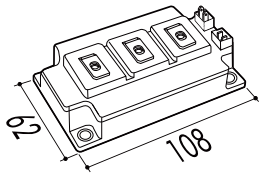

M283

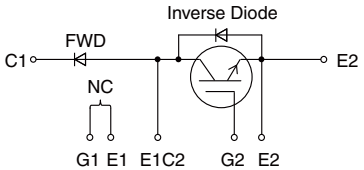

	600V		1200V	
Ic	U series	V series	U series	V series
50A			1MBI50U4F-120L-50	
75A			1MBI75U4F-120L-50	
100A			1MBI100U4F-120L-50	
150A				1MBI150VA-120L-50
200A				1MBI200VA-120L-50
200A			1MBI200U4H-120L-50	
300A	1MBI300U2H-060L-50			
400A		1MBI400VH-060L-50		

High Speed Modules

		mm		Ic	1200V High Speed IGBT
Chopper	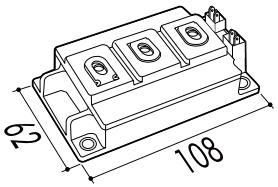 M249	Thermistor	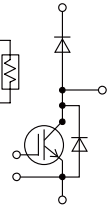	200A	1MBI200HH-120L-50
				300A	1MBI300HH-120L-50
				400A	1MBI400HH-120L-50
2-Pack	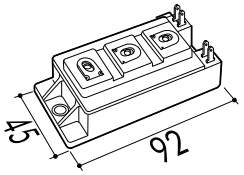 M233		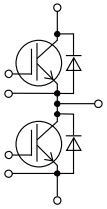	100A	2MBI100HB-120-50
	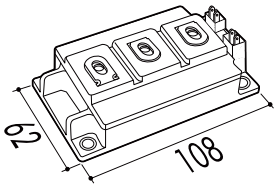 M249		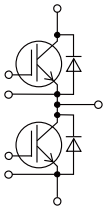	150A	2MBI150HH-120-50
				200A	2MBI200HH-120-50
	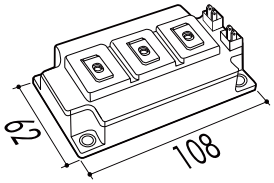 M276		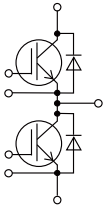	100A	2MBI100HJ-120-50
				150A	2MBI150HJ-120-50
				200A	2MBI200HJ-120-50
				300A	2MBI300HJ-120-50

High Power Modules

mm

		Ic	1200V	1700V		3300V	
			V series Trench-FS	V series Trench-FS		U series Trench-FS	
			Cu-baseplate	Cu-baseplate	AlSiC-baseplate	AlSiC-baseplate	AlSiC-baseplate Low switching loss
1-Pack	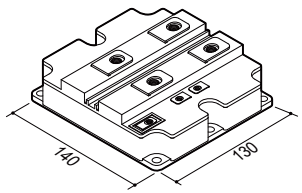 M151, M155	800A				1MBI800UG-330	
		1000A				1MBI1000UG-330	1MBI1000UG-330B
	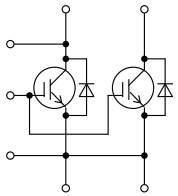	1200A	1MBI1200VC-120P	1MBI1200VC-170E	1MBI1200VR-170E		
		1600A	1MBI1600VC-120P	1MBI1600VC-170E	1MBI1600VR-170E		
		2400A	1MBI2400VC-120P	1MBI2400VC-170E	1MBI2400VR-170E		
	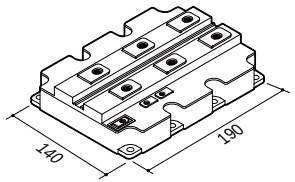 M152, M156	1200A				1MBI1200UE-330	
		1500A				1MBI1500UE-330	1MBI1500UE-330B
	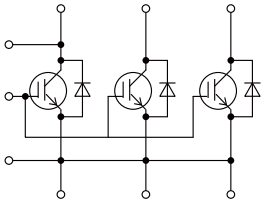	2400A	1MBI2400VD-120P	1MBI2400VD-170E	1MBI2400VS-170E		
		3600A	1MBI3600VD-120P	1MBI3600VD-170E	1MBI3600VS-170E		
2-Pack	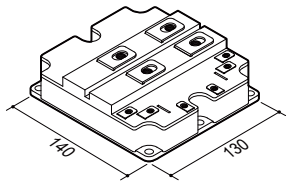 M256,M278	600A	2MBI600VG-120P	2MBI600VG-170E	2MBI600VT-170E		
		800A	2MBI800VG-120P	2MBI800VG-170E	2MBI800VT-170E		
	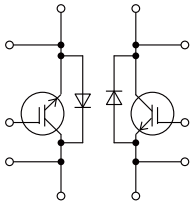	1200A	2MBI1200VG-120P	2MBI1200VG-170E	2MBI1200VT-170E		

Note: M151, M152, M256: Cu-baseplate M155, M156, M278: AlSiC-baseplate

High Power Modules

	mm	Ic	1700V X series	3300V X series
2-Pack HPnC	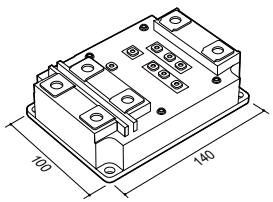 M288 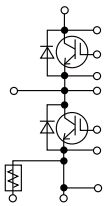	450A		2MBI450XUF330-50
		1000A	2MBI1000XUF170-50	
		1200A	2MBI1200XUF170-50	
	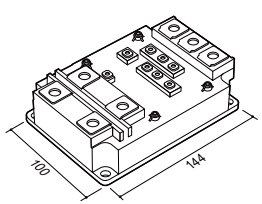 M292 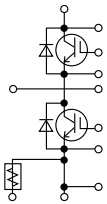	450A		2MBI450XVF330-50
		1000A	2MBI1000XVF170-50	
		1200A	2MBI1200XVF170-50	

PrimePACK™

mm

2-Pack

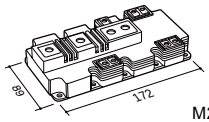

M271

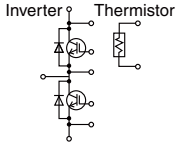

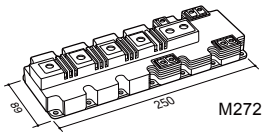

M272

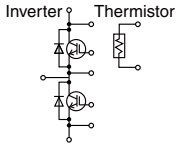

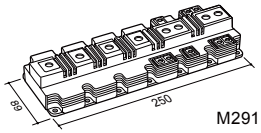

M291

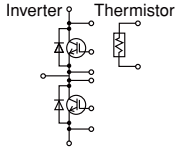

XXG

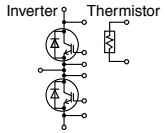

XRXF

	1200V				1700V		
	X series (7G)		V series		X series (7G)	V series	
Ic	Low switching loss	Soft turn off	Low switching loss	Soft turn off	Low switching loss	Low switching loss	Soft turn off
600A			2MBI600VXA-120E-50				
			2MBI600VXA-120E-80				
			2MBI600VXA-120E-54				
650A					2MBI650XXA170-50	2MBI650VXA-170E-50	
						2MBI650VXA-170E-80	
						2MBI650VXA-170E-54	
						2MBI650VXA-170EA-50	
						2MBI650VXA-170EA-80	
						2MBI650VXA-170EA-54	
900A	2MBI900XXA120E-50	2MBI900XXA120P-50	2MBI900VXA-120E-50	2MBI900VXA-120P-50			
			2MBI900VXA-120E-80	2MBI900VXA-120P-80			
			2MBI900VXA-120E-54	2MBI900VXA-120P-54			
1200A	2MBI1200XXE120E-50	2MBI1200XXE120P-50			2MBI1200XXE170-50		
1000A					2MBI1000XXB170-50	2MBI1000VXB-170E-50	
						2MBI1000VXB-170E-80	
						2MBI1000VXB-170E-54	
						2MBI1000VXB-170EA-50	
						2MBI1000VXB-170EA-80	
						2MBI1000VXB-170EA-54	
1400A		2MBI1400XXB120P-50		2MBI1400VXB-120P-50	2MBI1400XXB170-50	2MBI1400VXB-170E-50	2MBI1400VXB-170P-50
				2MBI1400VXB-120P-80		2MBI1400VXB-170E-80	2MBI1400VXB-170P-80
				2MBI1400VXB-120P-54		2MBI1400VXB-170E-54	2MBI1400VXB-170P-54
1800A		2MBI1800XXF120P-50			2MBI1800XXF170-50		
1800A					2MBI1800XXG170-50		
2400A		2MBI2400XRXF120-50					

Note1: The products with suffix '-54' on this page are labeled to specify the rank of V_{sat} and V_F.
Note2: "-80" : Pre-Applied Thermal-Interface-Material for "-54"

Note3: The products with 'EA' on this page have large FWD.
Note4: PrimePACK™ is registered trademark of Infineon Technologies AG, Germany.

PrimePACK™

mm

Chopper

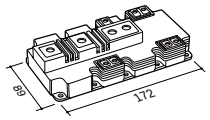

M271

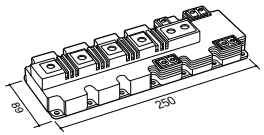

M272

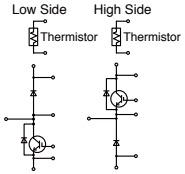

Ic	1200V		1700V	
	V series		V series	
	Low side configuration	High side configuration	Low side configuration	High side configuration
650A			1MBI650VXA-170EL-50	1MBI650VXA-170EH-50
			1MBI650VXA-170EL-80	1MBI650VXA-170EH-80
			1MBI650VXA-170EL-54	1MBI650VXA-170EH-54
900A	1MBI900VXA-120PD-50 *1	1MBI900VXA-120PC-50 *1		
	1MBI900VXA-120PD-54 *1	1MBI900VXA-120PC-54 *1		
	1MBI900VXA-120PD-80 *1	1MBI900VXA-120PC-80 *1		
1000A			1MBI1000VXB-170EL-50	1MBI1000VXB-170EH-50
			1MBI1000VXB-170EL-80	1MBI1000VXB-170EH-80
			1MBI1000VXB-170EL-54	1MBI1000VXB-170EH-54
1400A			1MBI1400VXB-170PL-50	1MBI1400VXB-170PH-50
	1MBI1400VXB-120PL-54	1MBI1400VXB-120PH-54	1MBI1400VXB-170PL-54	1MBI1400VXB-170PH-54
	1MBI1400VXB-120PL-80	1MBI1400VXB-120PH-80	1MBI1400VXB-170PL-80	1MBI1400VXB-170PH-80

Note1: The products with suffix '-54' on this page are labeled to specify the rank of V_{sat} and V_F.
Note2: "-80" : Pre-Applied Thermal-Interface-Material for "-54"
Note3: PrimePACK™ is registered trademark of Infineon Technologies AG, Germany.
Note4: *1: Antiparallel diode current rating is 120A. Application circuit is Boost/Buck chopper only.

Advanced T-type NPC 3-level Modules

mm

		Ic	600V V series	600V RB-IGBT	1200V V series	1200V RB-IGBT	1700V V series	1700V RB-IGBT
3 Phase With NTC, solder pins	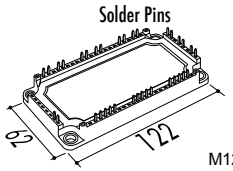 M1203 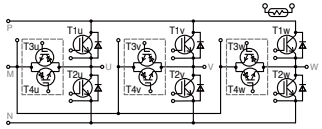	50A			12MBI50VN-120-50	600V		
		75A			12MBI75VN-120-50	600V		
		100A			12MBI100VN-120-50	600V		
3 Phase With NTC, press fit pins	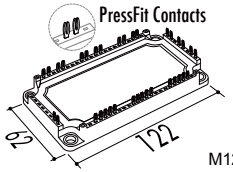 M1202 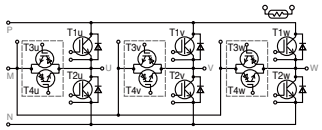	50A			12MBI50VX-120-50	600V		
		75A			12MBI75VX-120-50	600V		
		100A			12MBI100VX-120-50	600V		
1 Phase	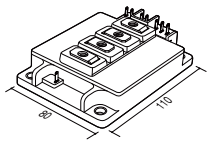 M403 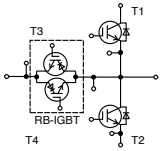	220A					4MBI220VG-170R2-50	1200V
		300A			4MBI300VG-120R-50	600V		
					4MBI300VG-120R1-50	900V		
		340A			4MBI340VF-120R-50	600V		
		400A	4MBI400VG-060R-50	600V	4MBI400VF-120R-50*1	600V		
		450A			4MBI450VF-120RD-50*2*3	600V		
1 Phase	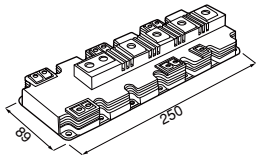 M404 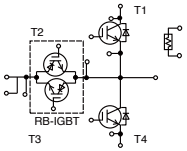	450A			4MBI450VB-120R1-50	900V	4MBI450VB-170R2-50	1200V
					4MBI450VB-120R1-60	900V	4MBI450VB-170R2-60	1200V
		600A					4MBI600VB-170R2-50	1200V
							4MBI600VB-170R2-60	1200V
		650A			4MBI650VB-120R1-50	900V		
					4MBI650VB-120R1-60	900V		
		900A			4MBI900VB-120R1-50	900V		
					4MBI900VB-120R1-60	900V		
					4MBI900VB-120RA-50	600V		
					4MBI900VB-120RA-60	600V		

Note: AT-NPC (Advanced T-type Neutral-Point-Clamped) 3-level Module integrates RB-IGBT (Reverse Blocking-IGBT) in addition to ordinary IGBT and FWD in single package.
*1: Particular for Inverter of UPS or PCS *2: Particular for Converter of UPS *3: Under development

I-type NPC 3-level Module

mm

		Ic	600V V series	1200V V series	1700V V series
1 Phase	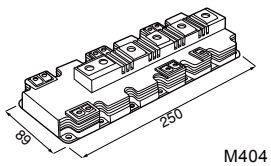 M404 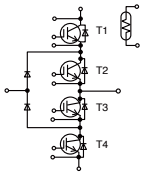	600A		4MBI600VC-120-50	
				4MBI600VC-120-60	

Small IPM (Intelligent Power Modules)

Small IPM with High Voltage Driver-I_C without Brake-Chopper

Built-in protection functions

- P-side fault status output (Alarm)
- N-side fault status output (Alarm)
- Under voltage protection (self shutdown)
- Over current protection (self shutdown)
- Overheating protection (self shutdown)
- Temperature sensor output (Vtemp, out)

mm

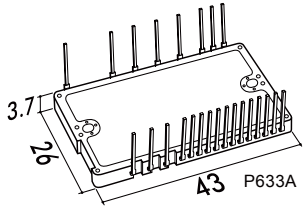

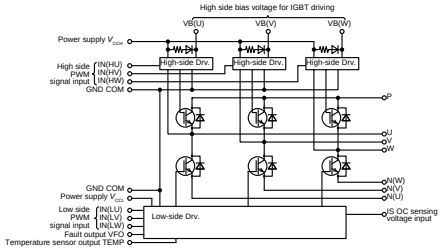

P-side fault status output (Alarm)	N-side fault status output (Alarm)	Under voltage protection (self shutdown)	Over current protection (self shutdown)	Overheating protection (self shutdown)	Temperature sensor output (Vtemp, out)	I_C	600V X series
✓	–	✓	✓	✓	–	15A	6MBP15XSD060-50
						20A	6MBP20XSD060-50
						30A	6MBP30XSD060-50
						35A	6MBP35XSD060-50
✓	✓	✓	✓	✓	–	15A	6MBP15XSF060-50
						20A	6MBP20XSF060-50
						30A	6MBP30XSF060-50
						35A	6MBP35XSF060-50

IPM (Intelligent Power Modules)

Built-in protection functions

- P-side fault status output (Alarm)
- N-side fault status output (Alarm)
- Under voltage protection (self shutdown)
- Over current protection (self shutdown)
- Overheating protection (self shutdown)
- Temperature sensor output (Vtemp, out)

mm

Without Brake-Chopper

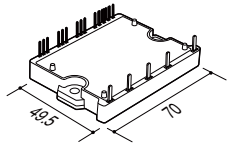

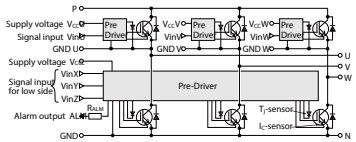

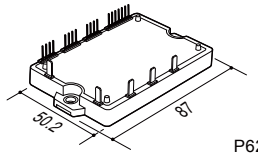

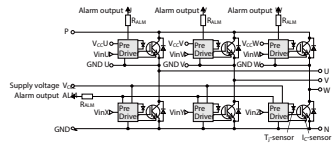

Without Brake-Chopper

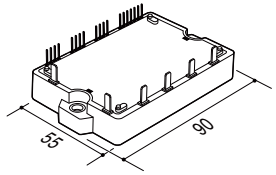

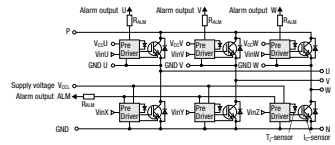

With Brake-Chopper

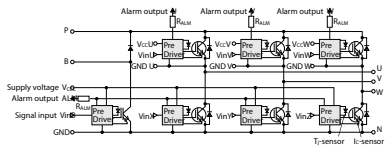

P-side fault status output (Alarm)	N-side fault status output (Alarm)	Under voltage protection (self shutdown)	Over current protection (self shutdown)	Overheating protection (self shutdown)	Temperature sensor output (Vtemp, out)	I_C	600V V series	1200V V series
–	✓	✓	✓	✓	–	10A		6MBP10VAA120-50
						15A		6MBP15VAA120-50
						20A	6MBP20VAA060-50	
						25A		6MBP25VAA120-50
						30A	6MBP30VAA060-50	
						50A	6MBP50VAA060-50	
–	✓	✓	✓	✓	✓	25A		6MBP25VBA120-50
						35A		6MBP35VBA120-50
						50A	6MBP50VBA060-50	6MBP50VBA120-50
						75A	6MBP75VBA060-50	
–	✓	✓	✓	✓	✓	25A		6MBP25VFN120-50
						35A		6MBP35VFN120-50
						50A	6MBP50VFN060-50	6MBP50VFN120-50
						75A	6MBP75VFN060-50	
						100A	6MBP100VFN060-50	
–	✓	✓	✓	✓	✓	25A		7MBP25VFN120-50
						35A		7MBP35VFN120-50
						50A	7MBP50VFN060-50	7MBP50VFN120-50
						75A	7MBP75VFN060-50	
						100A	7MBP100VFN060-50	

IPM (Intelligent Power Modules)

Built-in protection functions

P-side fault status output (Alarm)
N-side fault status output (Alarm)
Under voltage protection (self shutdown)
Over current protection (self shutdown)
Overheating protection (self shutdown)
Temperature sensor output (Vtemp, out)

mm

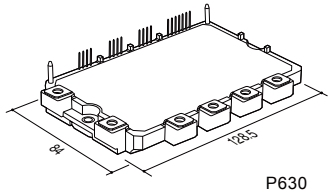

P630

								600V	1200V
							Ic	V series	V series
Without Brake-Chopper	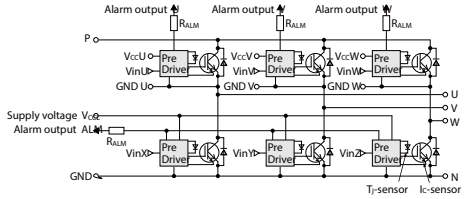	–	✓	✓	✓	✓	✓		
							25A		6MBP25VDA120-50
							35A		6MBP35VDA120-50
							50A	6MBP50VDA060-50	6MBP50VDA120-50
									6MBP50VDN120-50
							75A	6MBP75VDA060-50	6MBP75VDA120-50
									6MBP75VDN120-50
							100A	6MBP100VDA060-50	6MBP100VDA120-50
								6MBP100VDN060-50	6MBP100VDN120-50
							150A	6MBP150VDA060-50	
								6MBP150VDN060-50	
							200A	6MBP200VDA060-50	
								6MBP200VDN060-50	
With Brake-Chopper	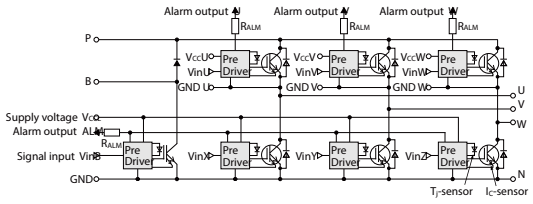	–	✓	✓	✓	✓	✓		
							25A		7MBP25VDA120-50
							35A		7MBP35VDA120-50
							50A	7MBP50VDA060-50	7MBP50VDA120-50
									7MBP50VDN120-50
							75A	7MBP75VDA060-50	7MBP75VDA120-50
									7MBP75VDN120-50
							100A	7MBP100VDA060-50	7MBP100VDA120-50
								7MBP100VDN060-50	7MBP100VDN120-50
							150A	7MBP150VDA060-50	
								7MBP150VDN060-50	
							200A	7MBP200VDA060-50	
								7MBP200VDN060-50	

Note1: The products with 'VDN' on this page have high heat dissipation characteristics.

Built-in protection functions

P-side fault status output (Alarm)
N-side fault status output (Alarm)
Under voltage protection (self shutdown)
Over current protection (self shutdown)
Overheating protection (self shutdown)
Temperature sensor output (Vtemp, out)

IPM (Intelligent Power Modules)

mm

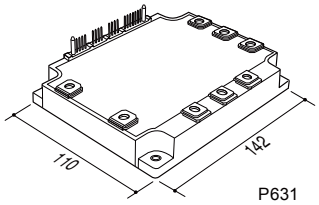

P631

									600V	1200V
								Ic	V series	V series
Without Brake-Chopper	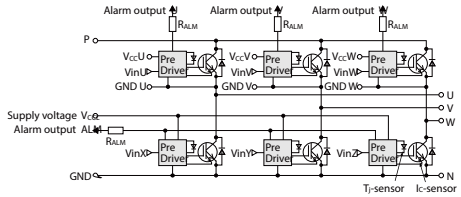	—	✓	✓	✓	✓	✓	100A		6MBP100VEA120-50
								150A		6MBP150VEA120-50
								200A	6MBP200VEA060-50	6MBP200VEA120-50
								300A	6MBP300VEA060-50	
								400A	6MBP400VEA060-50	
With Brake-Chopper	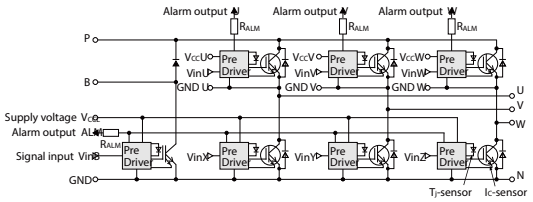	—	✓	✓	✓	✓	✓	100A		7MBP100VEA120-50
								150A		7MBP150VEA120-50
								200A	7MBP200VEA060-50	7MBP200VEA120-50
								300A	7MBP300VEA060-50	
								400A	7MBP400VEA060-50	

Hybrid SiC Modules

mm

			Ic	600V V series	1200V V series	1200V VW series	1700V V series
2-Pack	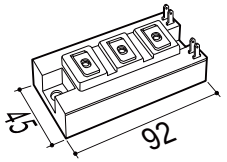 M274	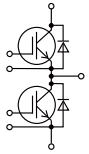	200A		2MSI200VAB-120-53		
2-Pack	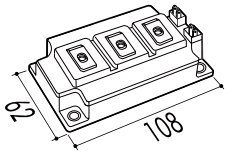 M276	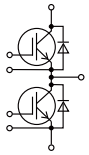	200A			2MSI200VWAH-120-53*	
			300A		2MSI300VAH-120C-53	2MSI300VWAH-120-53*	
2-Pack	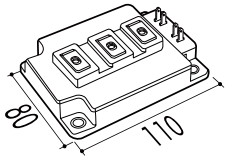 M277	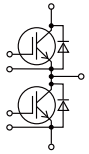	400A				2MSI400VAE-170-53
2-Pack	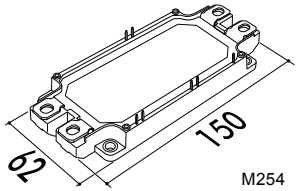 M254	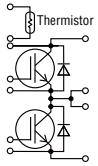	300A		2MSI300VAN-120-53	2MSI300VWAN-120-53*	
			450A		2MSI450VAN-120-53		
			550A				2MSI550VAN-170-53*
			600A		2MSI600VAN-120-53		
2-Pack	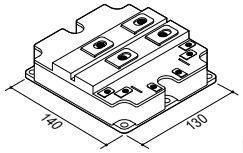 M278	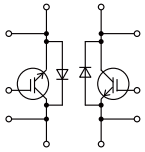	1200A				2MSI1200VAT-170PC *1*
							2MSI1200VAT-170EC *2*
PIM	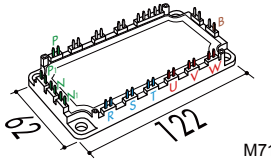 M712	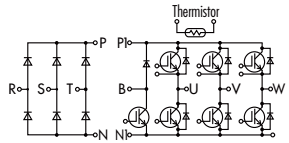	35A		7MSR35VAB120-50*		
			50A	7MSR50VAB060-50*	7MSR50VAB120-50*		
			75A	7MSR75VAB060-50*			
			100A	7MSR100VAB060-50*			
6-Pack	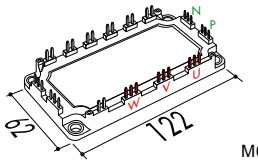 M633	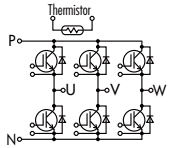	100A		6MSI100VAB-120-50*		

*1: Low $V_{CE(sat)}$ type *2: Low switching losses

*Under development

Hybrid SiC Modules

mm

		Ic	3300V X series	3300V SiC-SBD series
1-Pack	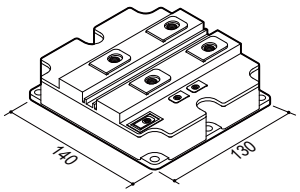 M155 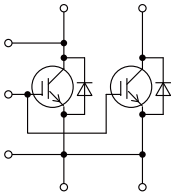	1200A	1MSI1200XAGF330-03	
1-Pack	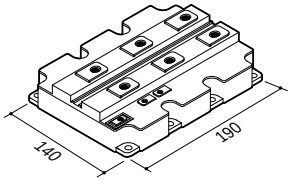 M156 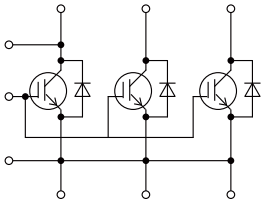	1800A	1MSI1800XAEF330-03	
Diode	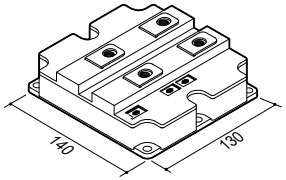 M289 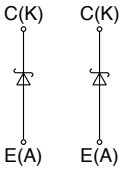	900A		2SI900AGF330-03

Discrete IGBT

	Ic	600V			650V	650V	1200V		
		V series	High speed V series	RB series	High speed W series	XS series	V series	High speed V series	High speed W series
TO-247-P2	15A							FGW15N120H	
	25A								FGW25N120W
	30A				FGW30N65W	FGW30XS65		FGW30N120H	
	35A		FGW35N60H						
	40A				FGW40N65W	FGW40XS65		FGW40N120H	FGW40N120W
	50A		FGW50N60H		FGW50N65W	FGW50XS65			
	60A				FGW60N65W				
	75A		FGW75N60H		FGW75N65W	FGW75XS65			
	15A						FGW15N120VD	FGW15N120HD	
	25A						FGW25N120VD		FGW25N120WD/WE
	30A	FGW30N60VD				FGW30XS65C		FGW30N120HD	
	35A		FGW35N60HD/HC						
	40A				FGW40N65WD/WE	FGW40XS65C	FGW40N120VD	FGW40N120HD	FGW40N120WD/WE
	50A	FGW50N60VD	FGW50N60HD/HC		FGW50N65WD/WE	FGW50XS65C/D			
	60A				FGW60N65WD/WE				
	75A		FGW75N60HD/HC		FGW75N65WE	FGW75XS65C/D			
	85A			FGW85N60RB					
TO-247-4-P2	40A								FGZ40N120WE
	50A				FGZ50N65WD/WE				
	75A				FGZ75N65WE	FGZ75XS65C			

Recommended operating frequency

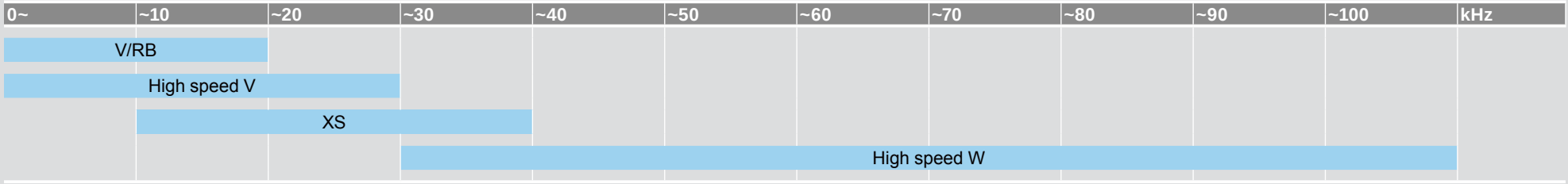

Rectifier Diode

	Ic	Ultra Fast Recovery Diodes 600V		Ultra Fast Recovery Diodes 650V	Soft Recovery Fast Recovery Diodes 1200V	
TO-220	15A	FDRP15S60L				
	25A	FDRP25S60L				
	35A					
	75A					
TO-247-P2	12A				FDRW12S120J	
	15A	FDRW15S60L				
	20A				FDRW20S120J	
	25A	FDRW25S60L				
	30A				FDRW30S120J	
	35A	FDRW35S60L				
	40A					FDRW40C120J
	50A		FDRW50C60L			
	60A					FDRW60C120J
	70A		FDRW70C60L			
TO-247-2-P2	60A			FDRW60T65L		
	75A	FDRW75T60L				

SiC-SBD

	Ic	600V		1200V	
T-Pack(s)	10A	FDCC10S65			
	20A		FDCC20C65		
	25A	FDCC25S65			
TO-220-2	10A	FDCP10S65			
	25A	FDCP25S65			
TO-220	20A		FDCP20C65		
TO-220F	20A		FDCA20C65		
TO-220F-2	10A	FDCA10S65			
	18A			FDCA18S120	
	25A	FDCA25S65			
TO-247	10A	FDCY10S65			
	18A			FDCY18S120	
	20A		FDCY20C65		
	25A	FDCY25S65			
	36A				FDCY36C120
	50A		FDCY50C65		
TO-247-2-P2	18A			FDCW18T120	

Package Outlines, mm

M151

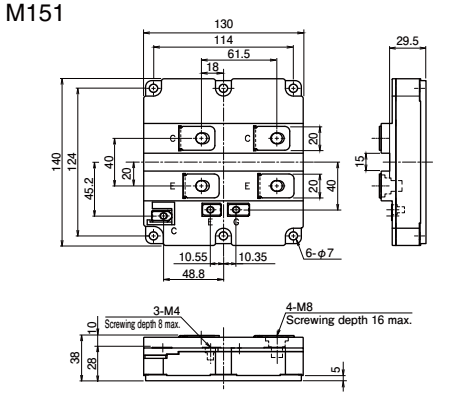

M152

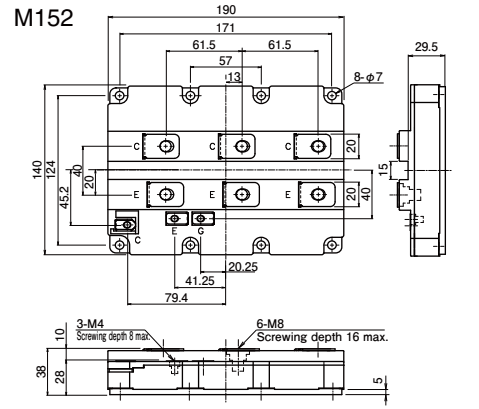

M153

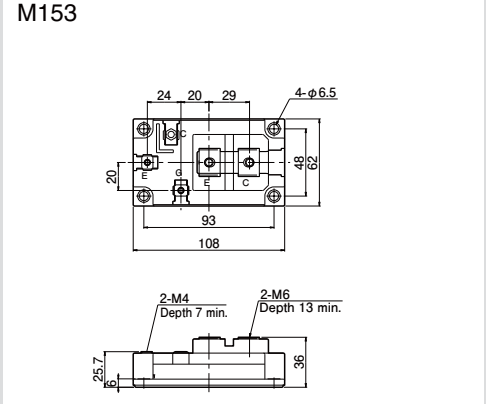

M155

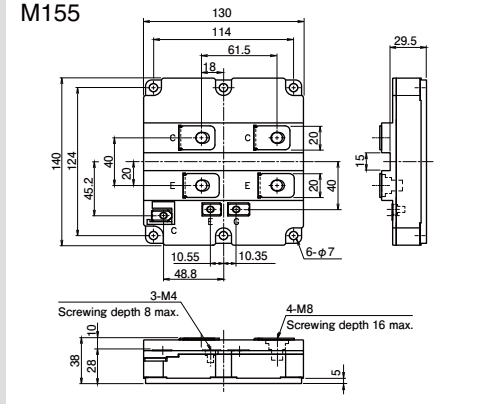

M156

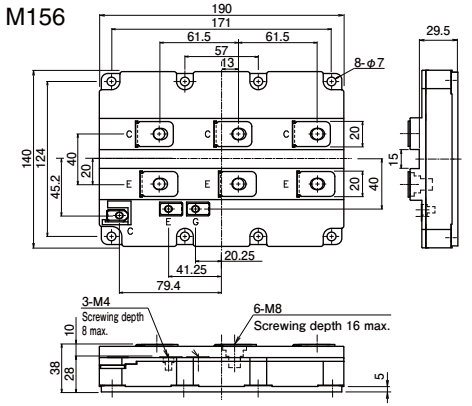

M233

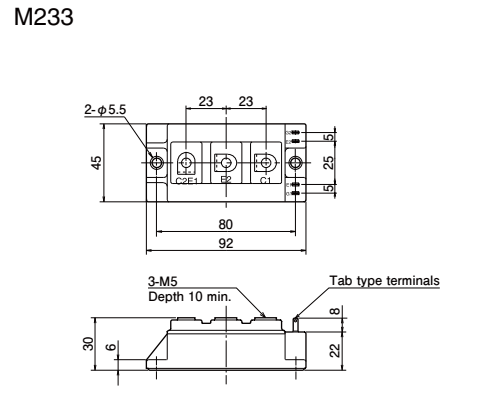

M249

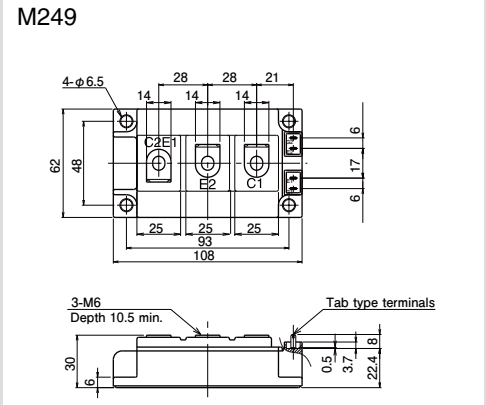

M254

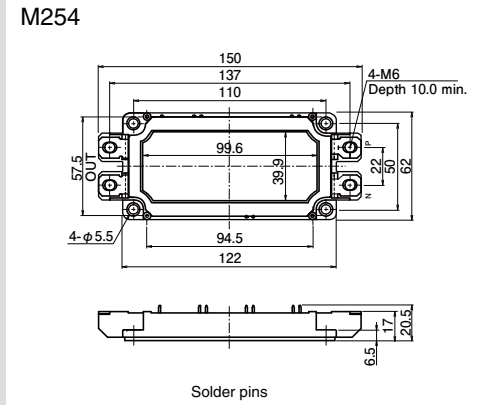

M256

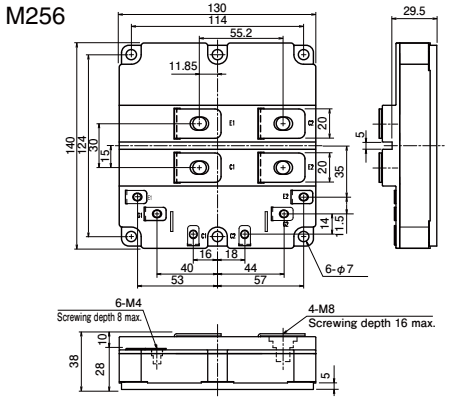

M259

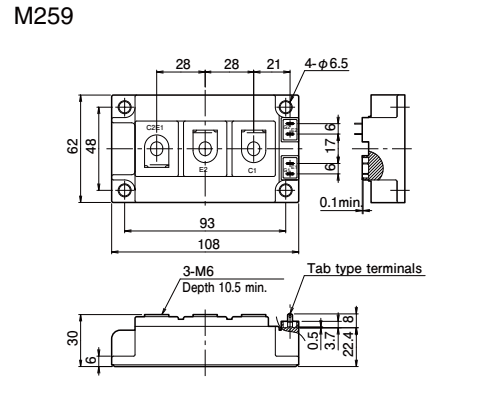

M260

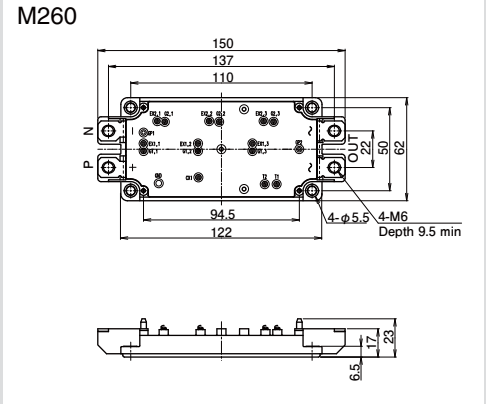

M262

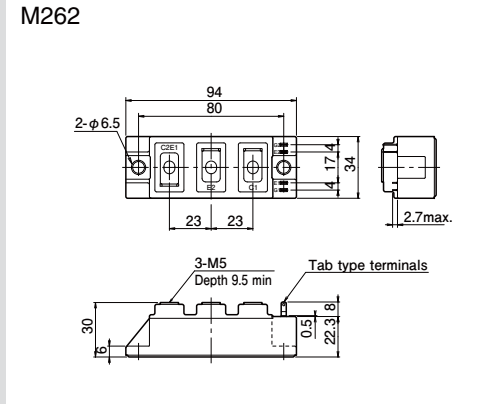

Package Outlines, mm

M263

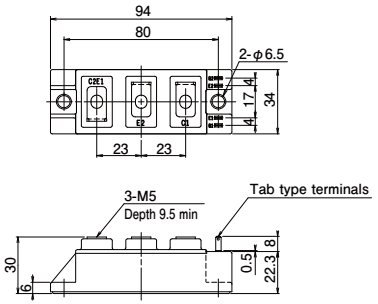

M271

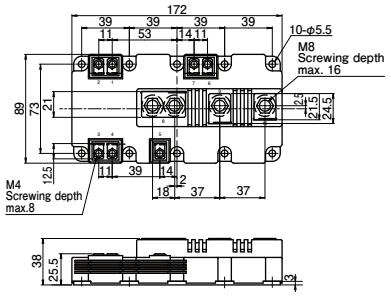

M272

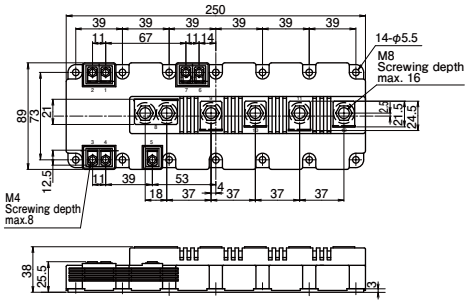

M274

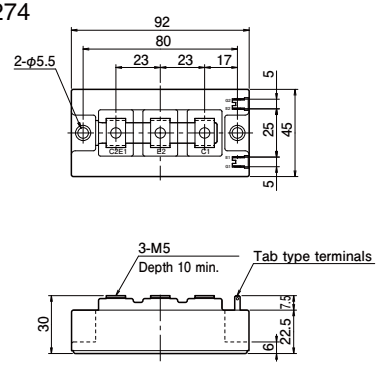

M275

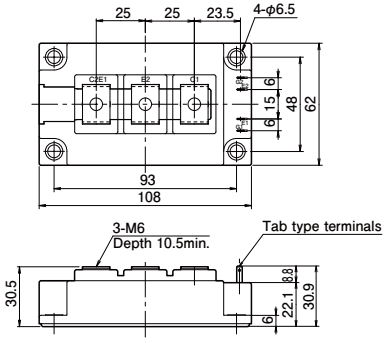

M276

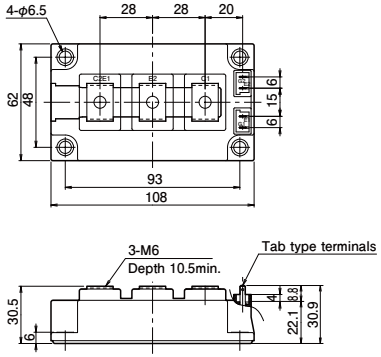

M277

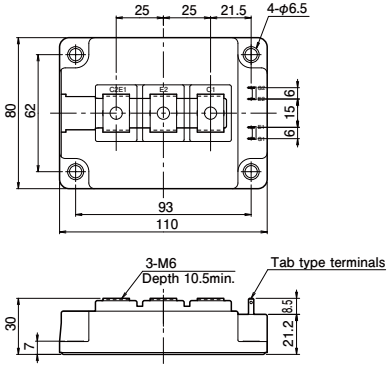

M278

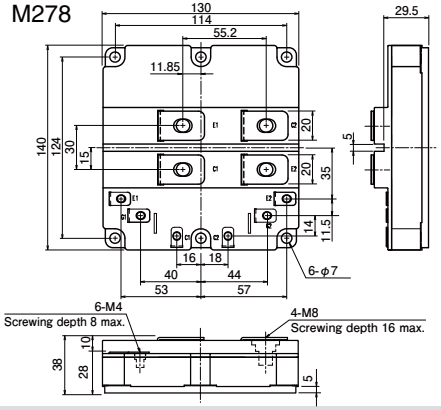

M282

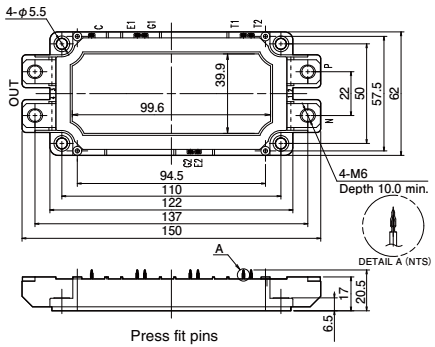

M283

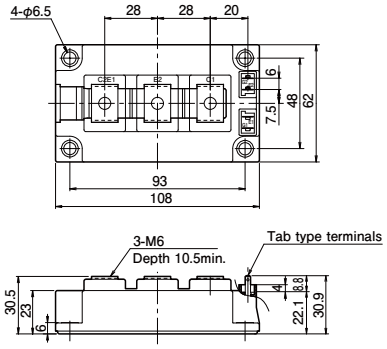

M285

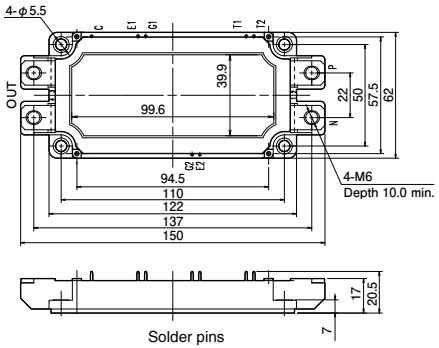

M286

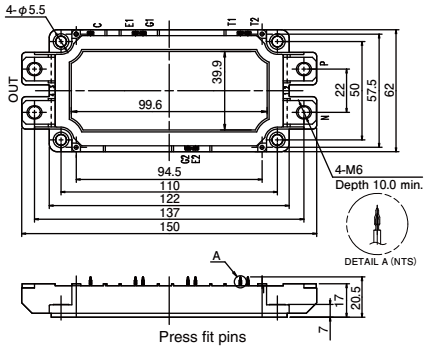

Package Outlines, mm

M288

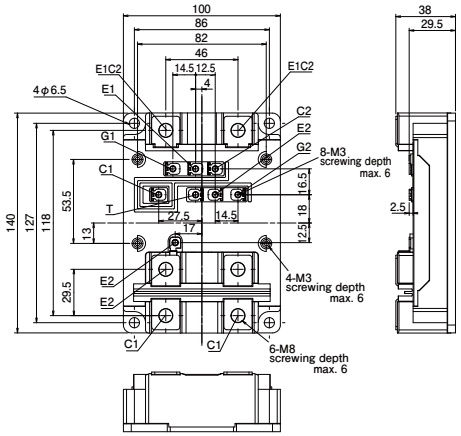

M289

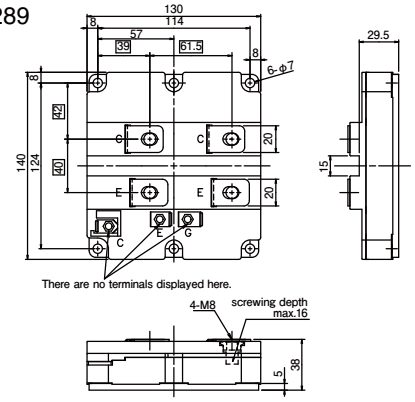

M291

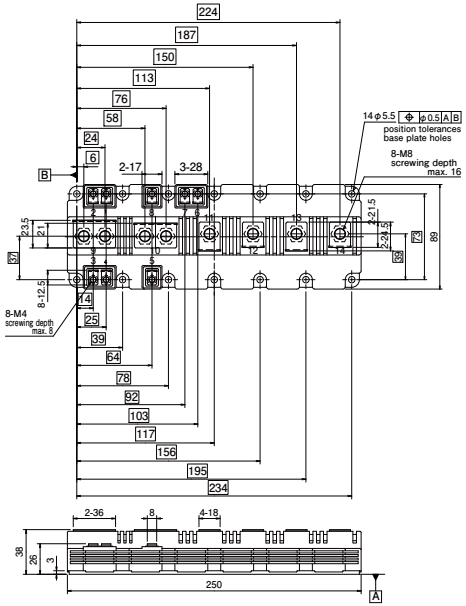

M629

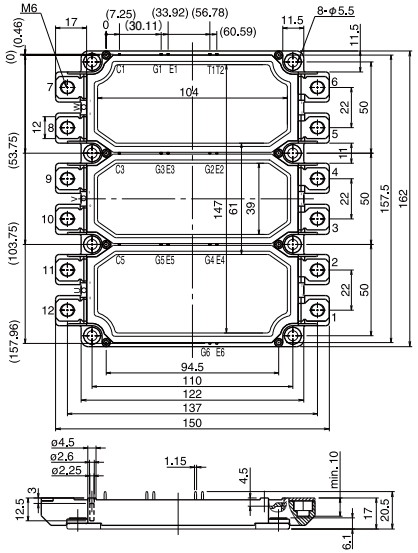

M403

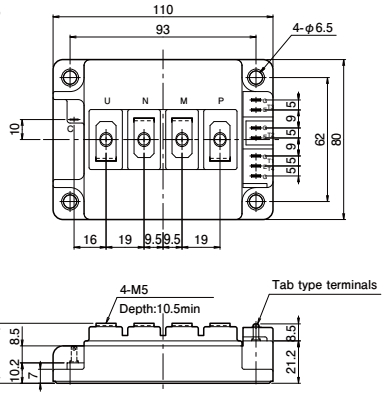

M292

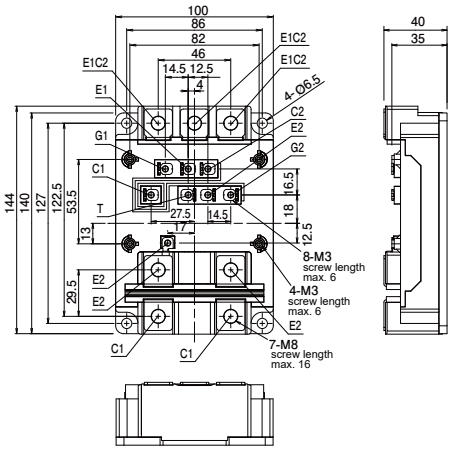

M404

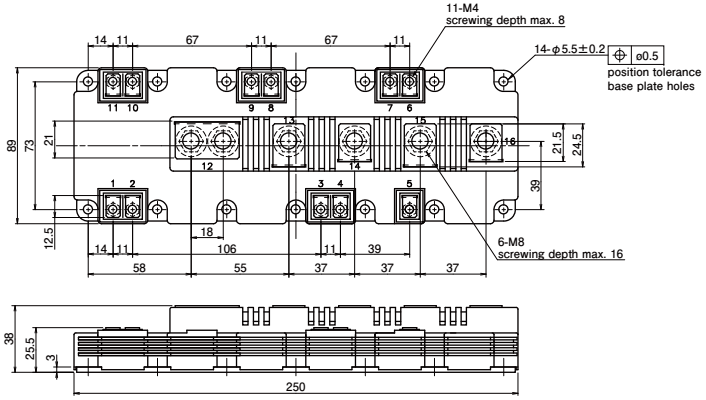

M633

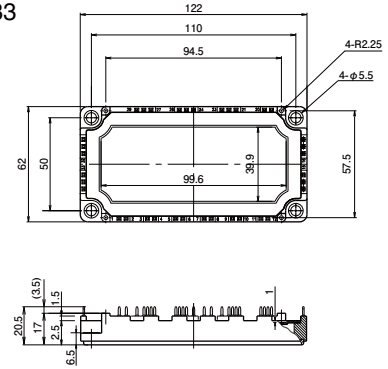

Package Outlines, mm

M636

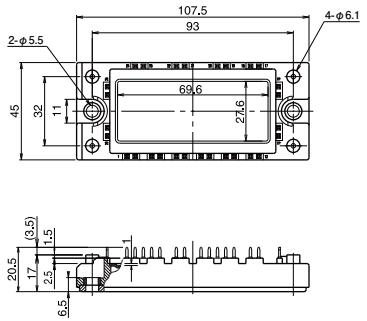

Solder pins

M647

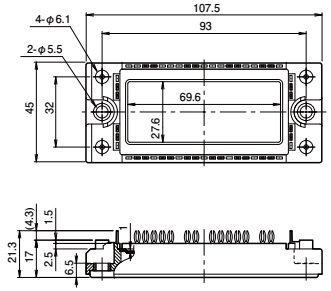

Press fit pins

M648

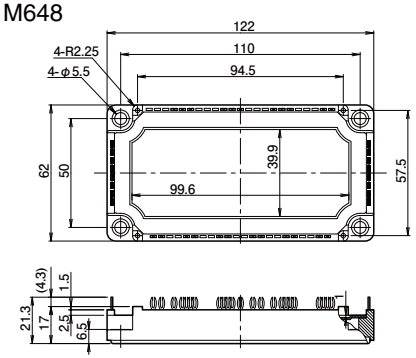

Press fit pins

M668

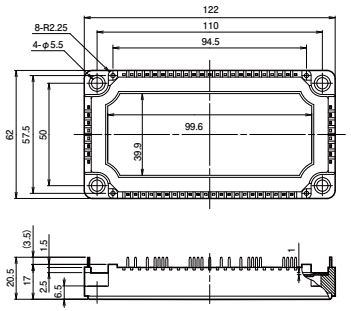

Solder pins

M669

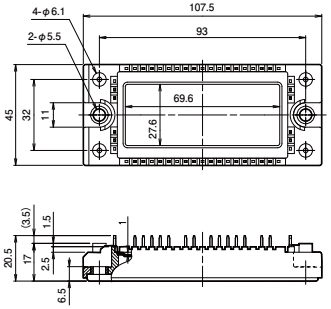

Solder pins

M711

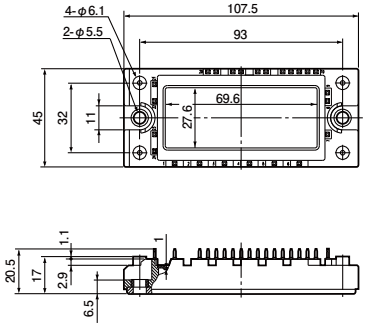

Solder pins

M712

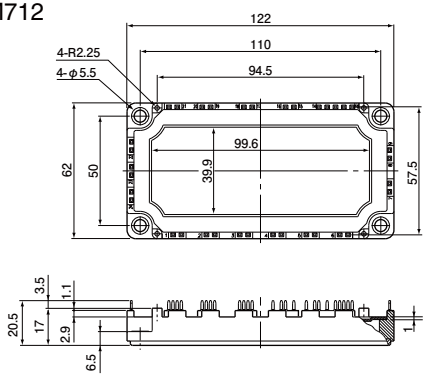

Solder pins

M719

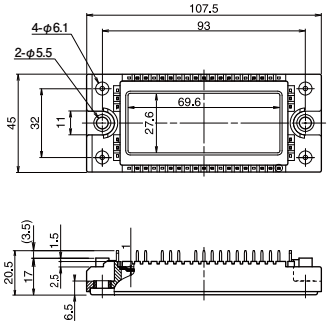

Solder pins

M720

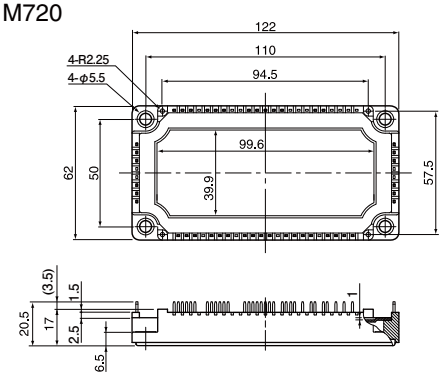

Solder pins

M721

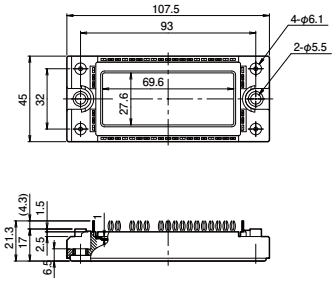

Press fit pins

M722

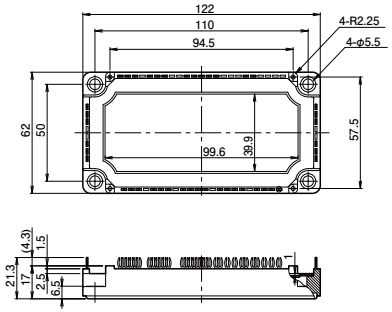

Press fit pins

M726

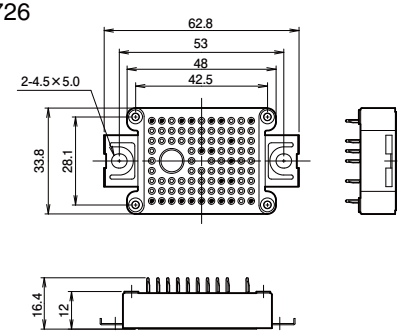

Press fit pins

Package Outlines, mm

M727

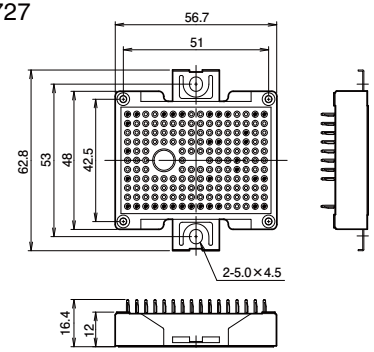

Press fit pins

M728

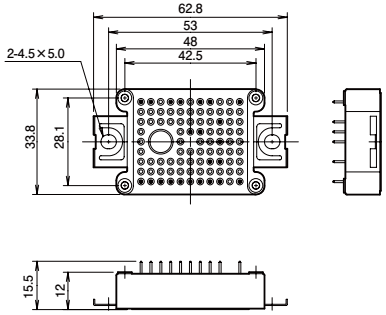

Solder pins

M729

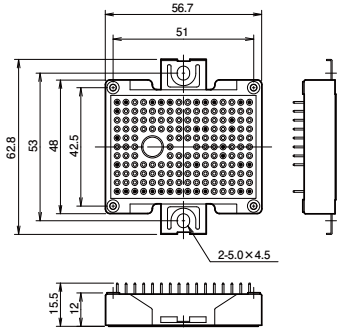

Solder pins

M730

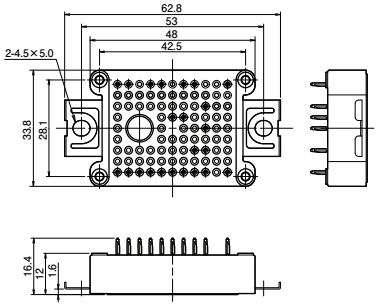

Press fit pins

M731

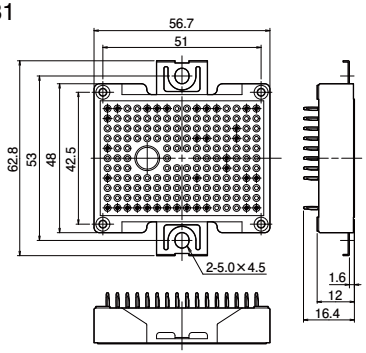

Press fit pins

M732

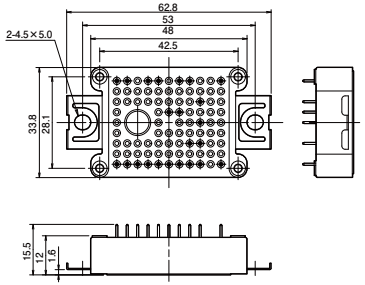

Solder pins

M733

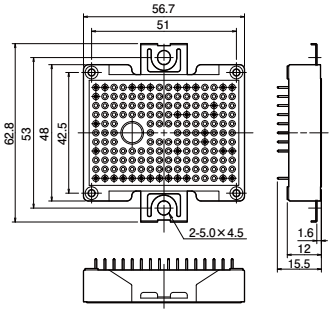

Solder pins

M1202

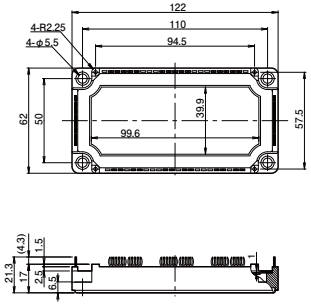

Press fit pins

M1203

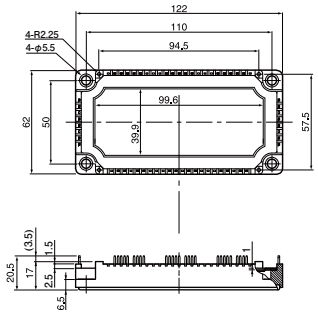

Solder pins

P626

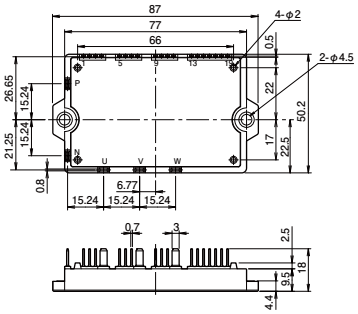

P629

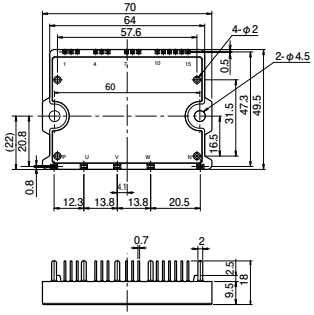

P630

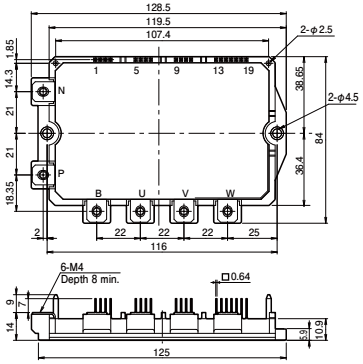

Package Outlines, mm

P631

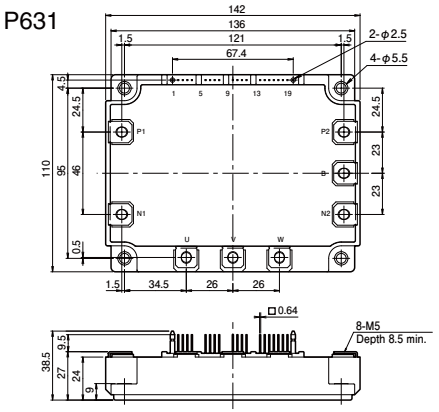

P633A

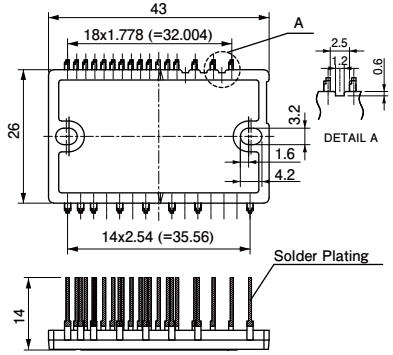

P636

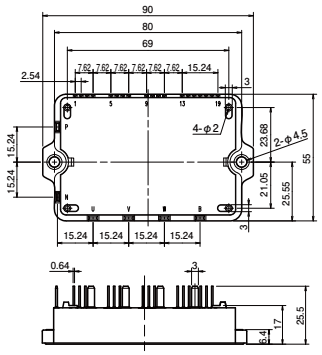

TO-247-P2

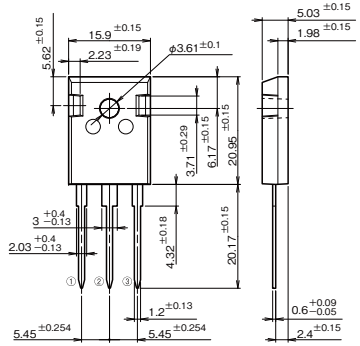

TO-247-2-P2

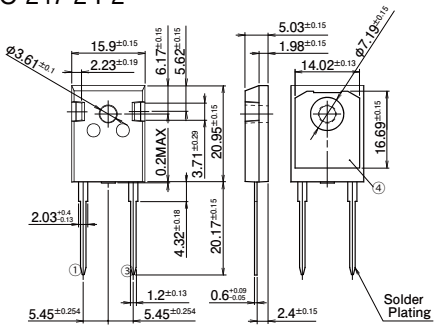

TO-247-4-P2

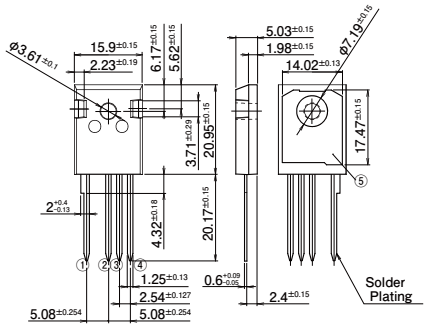

TO-247

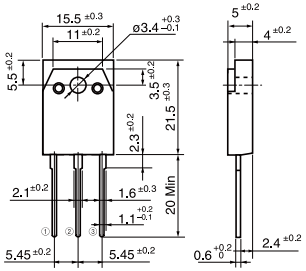

TO-220

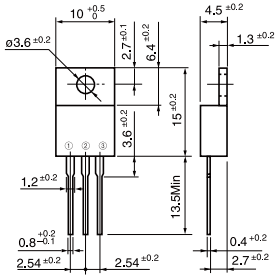

TO-220-2

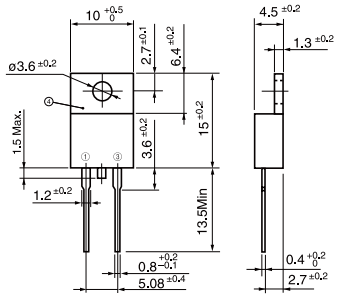

TO-220F

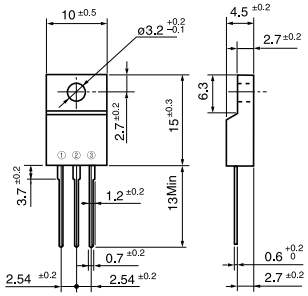

TO-220F-2

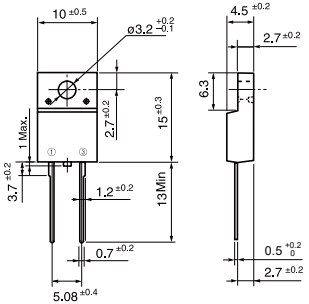

T-Pack(s)

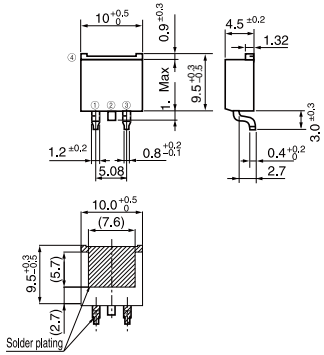

Package Outlines, mm

Package Outlines, mm

WARNING

1. This Catalog contains the product specifications, characteristics, data, materials, and structures as of March 2019.
   The contents are subject to change without notice for specification changes or other reasons. When using a product listed in this Catalog, be sure to obtain the latest specifications.

2. All applications described in this Catalog exemplify the use of Fuji's products for your reference only. No right or license, either express or implied, under any patent, copyright, trade secret or other intellectual property right owned by Fuji Electric Co., Ltd. is (or shall be deemed) granted. Fuji Electric Co., Ltd. makes no representation or warranty, whether express or implied, relating to the infringement or alleged infringement of other's intellectual property rights which may arise from the use of the applications described herein.

3. Although Fuji Electric Co., Ltd. is enhancing product quality and reliability, a small percentage of semiconductor products may become faulty. When using Fuji Electric semiconductor products in your equipment, you are requested to take adequate safety measures to prevent the equipment from causing a physical injury, fire, or other problem if any of the products become faulty. It is recommended to make your design fail-safe, flame retardant, and free of malfunction.

4. The products introduced in this Catalog are intended for use in the following electronic and electrical equipment which has normal reliability requirements.
   - Computers
   - OA equipment
   - Communications equipment (terminal devices)
   - Measurement equipment
   - Machine tools
   - Audiovisual equipment
   - Electrical home appliances
   - Personal equipment
   - Industrial robots etc.

5. If you need to use a product in this Catalog for equipment requiring higher reliability than normal, such as for the equipment listed below, it is imperative to contact Fuji Electric Co., Ltd. to obtain prior approval. When using these products for such equipment, take adequate measures such as a backup system to prevent the equipment from malfunctioning even if a Fuji's product incorporated in the equipment becomes faulty.
   - Transportation equipment (mounted on cars and ships)
   - Trunk communications equipment
   - Traffic-signal control equipment
   - Gas leakage detectors with an auto-shut-off feature
   - Emergency equipment for responding to disasters and anti-burglary devices
   - Safety devices
   - Medical equipment

6. Do not use products in this Catalog for the equipment requiring strict reliability such as the following and equivalents to strategic equipment (without limitation).
   - Space equipment
   - Aeronautic equipment
   - Nuclear control equipment
   - Submarine repeater equipment

7. Copyright ©1996-2019 by Fuji Electric Co., Ltd. All rights reserved.
   No part of this Catalog may be reproduced in any form or by any means without the express permission of Fuji Electric Co., Ltd.

8. If you have any question about any portion in this Catalog, ask Fuji Electric Co., Ltd. or its sales agents before using the product.
   Neither Fuji Electric Co., Ltd. nor its agents shall be liable for any injury caused by any use of the products not in accordance with instructions set forth herein.

Fuji Electric Co., Ltd.

Power Semiconductors Group
www.fujielectric.com/products/semiconductor/

Head Office:
Gate City Ohsaki, East Tower, 11-2 Osaki 1-chome,
Shinagawa-ku, Tokyo 141-0032, Japan

Fuji Electric Hong Kong Co., Ltd.
Suites 1911-13, 19/F., Tower 6, The Gateway, Harbour City,
Tsim Sha Tsui, Kowloon, Hong Kong
Tel: +852-2664-8699

Fuji Electric Taiwan Co., Ltd.
10F. No.168, Song Jiang Road, Taipei, Taiwan
Tel: +886-2-2515-1850

Fuji Electric Asia Pacific Pte. Ltd.
151 Lorong Chuan, #03-01/01A New Tech Park, SINGAPORE 556741
Tel: +65-6533-0014

Fuji Electric India Private Ltd.
409-410, Meadows, Sahar Plaza, J.B. Nagar Andheri-Kurla Road,
Andheri(E), Mumbai, India 400059
Tel: +91-22-4010-4870

Fuji Electric (China) Co., Ltd.
26F, Global Harbor Tower B,
1188 North KaiXuan Road, PuTuo District,
Shanghai 200062, P.R.China
Tel: +86-21-5496-1177

Fuji Electric Corp. of America
50 Northfield Avenue
Edison, NJ 08837, USA
Tel: +1-732-560-9410

Fuji Electric Europe GmbH
Goethering 58, 63067 Offenbach, am Main, F.R. GERMANY
Tel: +49-69-6690290

VEGETABLE OIL INK

Information in this catalog is subject to change without notice.

2019-5 PDF FOLS Printed in Japan